TVH

FORKS

QUICK REFERENCE GUIDE

GUÍA DE REFERENCIA
GUIDE DE RÉFÉRENCE FACILE

KEEPS YOU GOING.

- Standard total back height: 21½"(546mm)
- Clip spacing: 16"(406mm)
- Forks ship complete with fork pin kit
- -CAM = Forks brought to you by CAM

- Altura total estándar del talón 21½"(546mm)
- Longitûd dentro del clip de Fijación 16"(406mm)
- Las horquillas se envían con un kit de pasadores
- CAM-Horquillas presentadas a ustedes por CAM

- Hauteur de dossier standard: 21½"(546mm)
- Espacement entre les attaches: 16"(406mm)
- Fourches livrées avec arrêts de fourches
- CAM = Forks offert par CAM

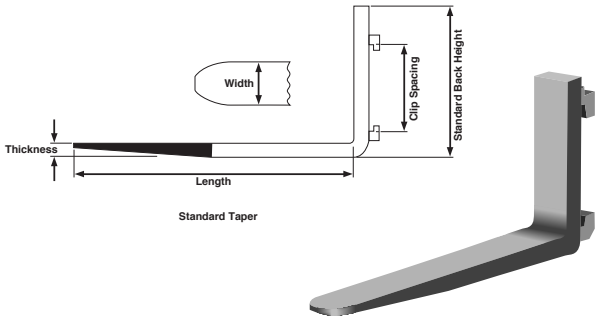

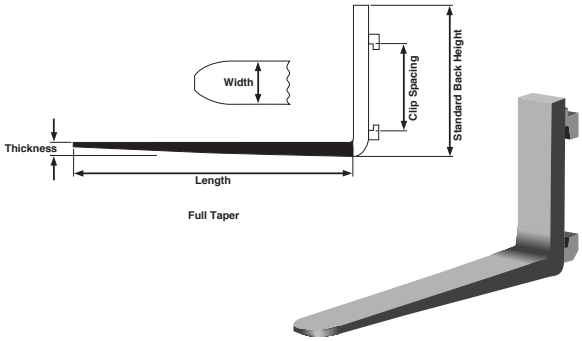

	Taper	**Thickness ▼**		Width		Applicable Length		Weight Per Fork	
SY41887/0915	Standard	1¼"	32mm	4"	102mm	36"	914mm	70lb	32kg
SY43919/0915	Full & Polish	1¼"	32mm	4"	102mm	36"	914mm	66lb	30kg
SY41887/1065	Standard	1¼"	32mm	4"	102mm	42"	1067mm	77lb	35kg
SY41887/1065-CAM	Standard	1¼"	32mm	4"	102mm	42"	1067mm	91lb	41kg
SY43919/1065	Full & Polish	1¼"	32mm	4"	102mm	42"	1067mm	73lb	33kg
SY41887/1220	Standard	1¼"	32mm	4"	102mm	48"	1219mm	86lb	39kg
SY41887/1220-CAM	Standard	1¼"	32mm	4"	102mm	48"	1219mm	101lb	46kg
SY43919/1220	Full & Polish	1¼"	32mm	4"	102mm	48"	1219mm	77lb	37kg
SY41887/1370	Standard	1¼"	32mm	4"	102mm	54"	1372mm	95lb	43kg
SY43919/1370	Full & Polish	1¼"	32mm	4"	102mm	54"	1372mm	82lb	37kg
SY41862/0815	Standard	1½"	38mm	4"	102mm	32"	813mm	85lb	39kg
SY41862/0915	Standard	1½"	38mm	4"	102mm	36"	914mm	88lb	40kg
SY41862/0915-CAM	Standard	1½"	38mm	4"	102mm	36"	914mm	92lb	42kg
SY41888/0915	Full & Polish	1½"	38mm	4"	102mm	36"	914mm	79lb	36kg
SY41862/1065	Standard	1½"	38mm	4"	102mm	42"	1067mm	99lb	45kg
SY41862/1065-CAM	Standard	1½"	38mm	4"	102mm	42"	1067mm	99lb	45kg
SY41888/1065	Full & Polish	1½"	38mm	4"	102mm	42"	1067mm	92lb	42kg
SY41888/1065-CAM	Full & Polish	1½"	38mm	4"	102mm	42"	1067mm	95lb	43kg
SY41862/1150-CAM	Standard	1½"	38mm	4"	102mm	45"	1150mm	107lb	49kg
SY41862/1220	Standard	1½"	38mm	4"	102mm	48"	1219mm	110lb	50kg
SY41862/1220-CAM	Standard	1½"	38mm	4"	102mm	48"	1219mm	112lb	51kg
SY41888/1220	Full & Polish	1½"	38mm	4"	102mm	48"	1219mm	97lb	44kg
SY41888/1220-CAM	Full & Polish	1½"	38mm	4"	102mm	48"	1219mm	101lb	46kg
SY41862/1370	Standard	1½"	38mm	4"	102mm	54"	1372mm	123lb	56kg
SY41862/1370-CAM	Standard	1½"	38mm	4"	102mm	54"	1372mm	115lb	52kg
SY41888/1370	Full & Polish	1½"	38mm	4"	102mm	54"	1372mm	110lb	50kg
SY41888/1370-CAM	Full & Polish	1½"	38mm	4"	102mm	54"	1372mm	115lb	52kg
SY41862/1525	Standard	1½"	38mm	4"	102mm	60"	1524mm	135lb	61kg
SY41862/1525-CAM	Standard	1½"	38mm	4"	102mm	60"	1524mm	132lb	60kg
SY41888/1525	Full & Polish	1½"	38mm	4"	102mm	60"	1524mm	119lb	54kg
SY41888/1525-CAM	Full & Polish	1½"	38mm	4"	102mm	60"	1524mm	200lb	91kg
SY41862/1830	Standard	1½"	38mm	4"	102mm	72"	1829mm	158lb	72kg
SY41862/1830-CAM	Standard	1½"	38mm	4"	102mm	72"	1829mm	154lb	70kg

	Taper	Thickness ▼		Width		Applicable Length		Weight Per Fork	
SY41862/2440-CAM	Standard	1½"	38mm	4"	102mm	96"	2440mm	172lb	78kg
SY41863/0915	Standard	1½"	38mm	5"	127mm	36"	914mm	106lb	48kg
SY41882/0915	Full & Polish	1½"	38mm	5"	127mm	36"	914mm	106lb	48kg
SY41863/1065	Standard	1½"	38mm	5"	127mm	42"	1067mm	126lb	57kg
SY41863/1065-CAM	Standard	1½"	38mm	5"	127mm	42"	1067mm	126lb	57kg
SY41882/1065	Full & Polish	1½"	38mm	5"	127mm	42"	1067mm	110lb	50kg
SY41882/1065-CAM	Full & Polish	1½"	38mm	5"	127mm	42"	1067mm	112lb	51kg
SY41863/1150-CAM	Standard	1½"	38mm	5"	127mm	45"	1150mm	127lb	58kg
SY41863/1220	Standard	1½"	38mm	5"	127mm	48"	1219mm	139lb	63kg
SY41863/1220-CAM	Standard	1½"	38mm	5"	127mm	48"	1219mm	139lb	63kg
SY41882/1220	Full & Polish	1½"	38mm	5"	127mm	48"	1219mm	125lb	57kg
SY41882/1220-CAM	Full & Polish	1½"	38mm	5"	127mm	48"	1219mm	121lb	55kg
SY41863/1370	Standard	1½"	38mm	5"	127mm	54"	1372mm	152lb	69kg
SY41863/1370-CAM	Standard	1½"	38mm	5"	127mm	54"	1372mm	148lb	67kg
SY41882/1370	Full & Polish	1½"	38mm	5"	127mm	54"	1372mm	139lb	63kg
SY41882/1370-CAM	Full & Polish	1½"	38mm	5"	127mm	54"	1372mm	130lb	59kg
SY41863/1525	Standard	1½"	38mm	5"	127mm	60"	1524mm	170lb	77kg
SY41863/1525-CAM	Standard	1½"	38mm	5"	127mm	60"	1524mm	170lb	77kg
SY41882/1525	Full & Polish	1½"	38mm	5"	127mm	60"	1524mm	149lb	68kg
SY41882/1525-CAM	Full & Polish	1½"	38mm	5"	127mm	60"	1524mm	136lb	62kg
SY41863/1830	Standard	1½"	38mm	5"	127mm	72"	1829mm	194lb	88kg
SY41863/1830-CAM	Standard	1½"	38mm	5"	127mm	72"	1829mm	194lb	88kg
SY41882/1830	Full & Polish	1½"	38mm	5"	127mm	72"	1829mm	170lb	77kg
SY41882/1830-CAM	Full & Polish	1½"	38mm	5"	127mm	72"	1829mm	154lb	70kg
SY41863/2440-CAM	Standard	1½"	38mm	5"	127mm	96"	2438mm	235lb	107kg
SY41881/1220-CAM	Full & Polish	1½"	38mm	7"	177mm	48"	1219mm	189lb	86kg
SY41861/0915	Standard	1¾"	44mm	4"	102mm	36"	914mm	88lb	40kg
SY41871/0915	Full & Polish	1¾"	44mm	4"	102mm	36"	914mm	88lb	40kg
SY41861/1065	Standard	1¾"	44mm	4"	102mm	42"	1067mm	99lb	45kg
SY41861/1065-CAM	Standard	1¾"	44mm	4"	102mm	42"	1067mm	100lb	45kg
SY41871/1065	Full & Polish	1¾"	44mm	4"	102mm	42"	1067mm	99lb	45kg
SY41871/1065-CAM	Full & Polish	1¾"	44mm	4"	102mm	42"	1067mm	106lb	48kg
SY41861/1220	Standard	1¾"	44mm	4"	102mm	48"	1219mm	108lb	49kg
SY41861/1220-CAM	Standard	1¾"	44mm	4"	102mm	48"	1219mm	120lb	55kg
SY41871/1220	Full & Polish	1¾"	44mm	4"	102mm	48"	1219mm	108lb	49kg
SY41871/1220-CAM	Full & Polish	1¾"	44mm	4"	102mm	48"	1219mm	110lb	50kg
SY41861/1370	Standard	1¾"	44mm	4"	102mm	54"	1372mm	119lb	54kg
SY41861/1370-CAM	Standard	1¾"	44mm	4"	102mm	54"	1372mm	128lb	58kg
SY41871/1370	Full & Polish	1¾"	44mm	4"	102mm	54"	1372mm	119lb	54kg
SY41871/1370-CAM	Full & Polish	1¾"	44mm	4"	102mm	54"	1372mm	121lb	55kg
SY41861/1525	Standard	1¾"	44mm	4"	102mm	60"	1524mm	128lb	58kg
SY41861/1525-CAM	Standard	1¾"	44mm	4"	102mm	60"	1524mm	138lb	63kg
SY41871/1525	Full & Polish	1¾"	44mm	4"	102mm	60"	1524mm	128lb	58kg
SY41871/1525-CAM	Full & Polish	1¾"	44mm	4"	102mm	60"	1524mm	127lb	58kg
SY41861/1830	Standard	1¾"	44mm	4"	102mm	72"	1829mm	152lb	69kg
SY41861/1830-CAM	Standard	1¾"	44mm	4"	102mm	72"	1829mm	166lb	75kg

	Taper	**Thickness ▼**		Width		Applicable Length		Weight Per Fork	
SY41871/1830	Full & Polish	1¾"	44mm	4"	102mm	72"	1829mm	152lb	69kg
SY41871/1830-CAM	Full & Polish	1¾"	44mm	4"	102mm	72"	1829mm	143lb	65kg
SY4186/440-CAM	Standard	1¾"	44mm	4"	102mm	96"	2438mm	195lb	89kg
SY41864/0915	Standard	1¾"	44mm	5"	127mm	36"	914mm	125lb	57kg
SY41865/0915	Full & Polish	1¾"	44mm	5"	127mm	36"	914mm	119lb	54kg
SY41864/1065	Standard	1¾"	44mm	5"	127mm	42"	1067mm	137lb	63kg
SY41864/1065-CAM	Standard	1¾"	44mm	5"	127mm	42"	1067mm	139lb	63kg
SY41865/1065	Full & Polish	1¾"	44mm	5"	127mm	42"	1067mm	128lb	58kg
SY41865/1065-CAM	Full & Polish	1¾"	44mm	5"	127mm	42"	1067mm	121lb	55kg
SY41864/1220	Standard	1¾"	44mm	5"	127mm	48"	1219mm	152lb	69kg
SY41864/1220-CAM	Standard	1¾"	44mm	5"	127mm	48"	1219mm	150lb	68kg
SY41865/1220	Full & Polish	1¾"	44mm	5"	127mm	48"	1219mm	137lb	62kg
SY41865/1220-CAM	Full & Polish	1¾"	44mm	5"	127mm	48"	1219mm	130lb	59kg
SY41864/1370	Standard	1¾"	44mm	5"	127mm	54"	1372mm	168lb	76kg
SY41864/1370-CAM	Standard	1¾"	44mm	5"	127mm	54"	1372mm	168lb	76kg
SY41865/1370	Full & Polish	1¾"	44mm	5"	127mm	54"	1372mm	145lb	66kg
SY41865/1370-CAM	Full & Polish	1¾"	44mm	5"	127mm	54"	1372mm	139lb	63kg
SY41864/1525	Standard	1¾"	44mm	5"	127mm	60"	1524mm	183lb	83kg
SY41864/1525-CAM	Standard	1¾"	44mm	5"	127mm	60"	1524mm	173lb	79kg
SY41865/1525	Full & Polish	1¾"	44mm	5"	127mm	60"	1524mm	156lb	71kg
SY41865/1525-CAM	Full & Polish	1¾"	44mm	5"	127mm	60"	1524mm	152lb	69kg
SY41864/1830	Standard	1¾"	44mm	5"	127mm	72"	1829mm	212lb	96kg
SY41864/1830-CAM	Standard	1¾"	44mm	5"	127mm	72"	1829mm	190lb	86kg
SY41865/1830	Full & Polish	1¾"	44mm	5"	127mm	72"	1829mm	172lb	78kg
SY41865/1830-CAM	Full & Polish	1¾"	44mm	5"	127mm	72"	1829mm	170lb	77kg
SY41864/2440	Standard	1¾"	44mm	5"	127mm	96"	2438mm	273lb	124kg
SY41864/2440-CAM	Standard	1¾"	44mm	5"	127mm	96"	2438mm	273lb	124kg
SY41865/2440-CAM	Full & Polish	1¾"	44mm	5"	127mm	96"	2438mm	205lb	93kg
SY42056/1065-CAM	Block	2"	51mm	2"	51mm	42"	1067mm	74lb	34kg
SY42056/1220-CAM	Standard	2"	51mm	2"	51mm	48"	1219mm	80lb	36kg
SY41867/1065-CAM	Standard	2"	51mm	4"	102mm	42"	1067mm	123lb	56kg
SY41867/1220-CAM	Standard	2"	51mm	4"	102mm	48"	1219mm	136lb	62kg
SY41867/1370-CAM	Standard	2"	51mm	4"	102mm	54"	1372mm	149lb	68kg
SY41867/1525-CAM	Standard	2"	51mm	4"	102mm	60"	1525mm	163lb	74kg
SY41867/1830-CAM	Standard	2"	51mm	4"	102mm	72"	1829mm	189lb	89kg

- Standard total back height: 25½" (648mm)
- Clip spacing: 20" (508mm)
- Distance between fixing brackets: 20" (508mm)
- Forks ship complete with fork pin kit
- -CAM = Forks brought to you by CAM

- Altura total estándar del talón 25½" (648mm)
- Longitûd dentro del clip de Fijación 20" (508mm)
- Distancia entre los soportes de fijación: 20 "(508mm)
- Las horquillas se envían con un kit de pasadores
- CAM-Horquillas presentadas a ustedes por CAM

- Hauteur de dossier standard: 25½"(648mm)
- Espacement entre les attaches: 20"(508mm)
- Distance entre les points de fixation: 20" (508mm)
- Fourches livrées avec arrêts de fourches
- CAM = Forks offert par CAM

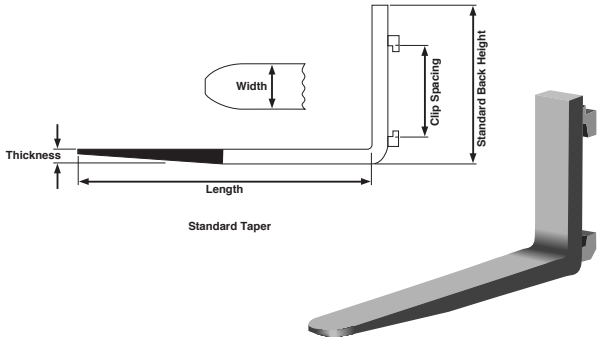

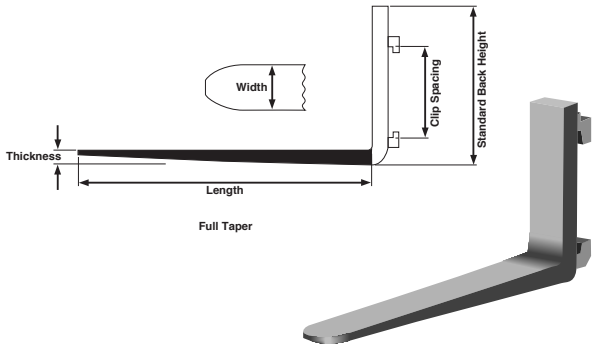

	Taper	Thickness ▼		Width		Applicable Length		Weight Per Fork	
SY76559/1065-CAM	Full & Polish	1½"	38mm	6"	152mm	42"	1067mm	156lb	71kg
SY76559/1220-CAM	Full & Polish	1½"	38mm	6"	152mm	48"	1219mm	165lb	75kg
SY41889/1065-CAM	Full & Polish	1½"	38mm	7"	177mm	42"	1067mm	190lb	86kg
SY41889/1220-CAM	Full & Polish	1½"	38mm	7"	177mm	48"	1219mm	198lb	90kg
SY41883/1065-CAM	Full & Polish	1½"	38mm	8"	203mm	42"	1067mm	205lb	93kg
SY41883/1220-CAM	Full & Polish	1½"	38mm	8"	203mm	48"	1219mm	215lb	98kg
SY41883/1370-CAM	Full & Polish	1½"	38mm	8"	203mm	54"	1372mm	230lb	105kg
SY1237630	Full & Polish	1½"	38mm	10"	250mm	47.5"	1206mm	213lb	97kg
SY76561/0915	Standard	1¾"	44mm	5"	127mm	36"	914mm	130lb	59kg
SY41872/1065	Full & Polish	1¾"	44mm	5"	127mm	42"	1067mm	139lb	63kg
SY41872/1065-CAM	Full & Polish	1¾"	44mm	5"	127mm	42"	1067mm	143lb	65kg
SY76561/1065	Standard	1¾"	44mm	5"	127mm	42"	1067mm	148lb	67kg
SY76561/1065-CAM	Standard	1¾"	44mm	5"	127mm	42"	1067mm	148lb	67kg
SY41872/1220	Full & Polish	1¾"	44mm	5"	127mm	48"	1219mm	152lb	69kg
SY41872/1220-CAM	Full & Polish	1¾"	44mm	5"	127mm	48"	1219mm	152lb	69kg
SY76561/1220	Standard	1¾"	44mm	5"	127mm	48"	1219mm	165lb	75kg
SY76561/1220-CAM	Standard	1¾"	44mm	5"	127mm	48"	1219mm	170lb	77kg
SY41872/1370	Full & Polish	1¾"	44mm	5"	127mm	54"	1372mm	167lb	76kg
SY41872/1370-CAM	Full & Polish	1¾"	44mm	5"	127mm	54"	1372mm	163lb	74kg
SY76561/1370	Standard	1¾"	44mm	5"	127mm	54"	1372mm	181lb	82kg
SY76561/1370-CAM	Standard	1¾"	44mm	5"	127mm	54"	1372mm	178lb	81kg
SY41872/1525	Full & Polish	1¾"	44mm	5"	127mm	60"	1524mm	178lb	81kg
SY41872/1525-CAM	Full & Polish	1¾"	44mm	5"	127mm	60"	1524mm	169lb	77kg
SY76561/1525	Standard	1¾"	44mm	5"	127mm	60"	1524mm	194lb	88kg
SY76561/1525-CAM	Standard	1¾"	44mm	5"	127mm	60"	1524mm	186lb	85kg
SY76561/1830	Standard	1¾"	44mm	5"	127mm	72"	1829mm	225lb	102kg
SY76561/1830-CAM	Standard	1¾"	44mm	5"	127mm	72"	1829mm	222lb	101kg
SY7656/440	Standard	1¾"	44mm	5"	127mm	96"	2438mm	290lb	132kg
SY7656/440-CAM	Standard	1¾"	44mm	5"	127mm	96"	2438mm	290lb	132kg
SY41872/0915	Full & Polish	1¾"	44mm	5"	127mm	36"	914mm	130lb	59kg
SY42057/1065-CAM	Block	2"	51mm	2"	51mm	42"	1067mm	81lb	37kg

	Taper	Thickness ▼		Width		Applicable Length		Weight Per Fork	
SY42057/1220-CAM	Block	2"	51mm	2"	51mm	48"	1219mm	88lb	40kg
SY41873/0915	Full & Polish	2"	51mm	5"	127mm	36"	914mm	143lb	65kg
SY76582/0915	Standard	2"	51mm	5"	127mm	36"	914mm	152lb	69kg
SY41873/1065	Full & Polish	2"	51mm	5"	127mm	42"	1067mm	154lb	70kg
SY41873/1065-CAM	Full & Polish	2"	51mm	5"	127mm	42"	1067mm	156lb	71kg
SY76582/1065	Standard	2"	51mm	5"	127mm	42"	1067mm	163lb	74kg
SY76582/1065-CAM	Standard	2"	51mm	5"	127mm	42"	1067mm	163lb	74kg
SY41873/1220	Full & Polish	2"	51mm	5"	127mm	48"	1219mm	167lb	76kg
SY41873/1220-CAM	Full & Polish	2"	51mm	5"	127mm	48"	1219mm	165lb	75kg
SY76582/1220	Standard	2"	51mm	5"	127mm	48"	1219mm	181lb	82kg
SY76582/1220-CAM	Standard	2"	51mm	5"	127mm	48"	1219mm	170lb	77kg
SY41873/1370	Full & Polish	2"	51mm	5"	127mm	54"	1372mm	183lb	83kg
SY41873/1370-CAM	Full & Polish	2"	51mm	5"	127mm	54"	1372mm	178lb	81kg
SY76582/1370	Standard	2"	51mm	5"	127mm	54"	1372mm	196lb	89kg
SY76582/1370-CAM	Standard	2"	51mm	5"	127mm	54"	1372mm	196lb	89kg
SY41873/1525	Full & Polish	2"	51mm	5"	127mm	60"	1524mm	203lb	92kg
SY41873/1525-CAM	Full & Polish	2"	51mm	5"	127mm	60"	1524mm	187lb	85kg
SY76582/1525	Standard	2"	51mm	5"	127mm	60"	1524mm	216lb	98kg
SY76582/1525-CAM	Standard	2"	51mm	5"	127mm	60"	1524mm	204lb	93kg
SY41873/1830	Full & Polish	2"	51mm	5"	127mm	72"	1829mm	238lb	108kg
SY41873/1830-CAM	Full & Polish	2"	51mm	5"	127mm	72"	1829mm	207lb	94kg
SY76582/1830	Standard	2"	51mm	5"	127mm	72"	1829mm	249lb	113kg
SY76582/1830-CAM	Standard	2"	51mm	5"	127mm	72"	1829mm	244lb	111kg
SY76582/2440	Standard	2"	51mm	5"	127mm	96"	2438mm	317lb	144kg
SY76582/2440-CAM	Standard	2"	51mm	5"	127mm	96"	2438mm	317lb	144kg
SY41874/0915	Full & Polish	2"	51mm	6"	152mm	36"	914mm	168lb	76kg
SY76583/0915	Standard	2"	51mm	6"	152mm	36"	914mm	176lb	80kg
SY41874/1065	Full & Polish	2"	51mm	6"	152mm	42"	1067mm	187lb	85kg
SY41874/1220-CAM	Full & Polish	2"	51mm	6"	152mm	48"	1219mm	198lb	90kg
SY76583/1065	Standard	2"	51mm	6"	152mm	42"	1067mm	187lb	85kg
SY76583/1220-CAM	Standard	2"	51mm	6"	152mm	48"	1219mm	222lb	101kg
SY41874/1220	Full & Polish	2"	51mm	6"	152mm	48"	1219mm	197lb	90kg
SY76583/1220	Standard	2"	51mm	6"	152mm	48"	1219mm	209lb	95kg
SY41874/1370	Full & Polish	2"	51mm	6"	152mm	54"	1372mm	205lb	93kg
SY41874/1370-CAM	Full & Polish	2"	51mm	6"	152mm	54"	1372mm	211lb	96kg
SY76583/1370	Standard	2"	51mm	6"	152mm	54"	1372mm	227lb	103kg
SY76583/1370-CAM	Standard	2"	51mm	6"	152mm	54"	1372mm	235lb	107kg
SY41874/1525	Full & Polish	2"	51mm	6"	152mm	60"	1524mm	216lb	98kg
SY41874/1525-CAM	Full & Polish	2"	51mm	6"	152mm	60"	1524mm	222lb	101kg
SY76583/1525	Standard	2"	51mm	6"	152mm	60"	1524mm	249lb	113kg
SY76583/1525-CAM	Standard	2"	51mm	6"	152mm	60"	1524mm	253lb	115kg
SY41874/1830	Full & Polish	2"	51mm	6"	152mm	72"	1829mm	240lb	109kg
SY41874/1830-CAM	Full & Polish	2"	51mm	6"	152mm	72"	1829mm	246lb	112kg
SY76583/1830	Standard	2"	51mm	6"	152mm	72"	1829mm	228lb	104kg
SY76583/1830-CAM	Standard	2"	51mm	6"	152mm	72"	1829mm	294lb	134kg
SY76583/2440	Standard	2"	51mm	6"	152mm	96"	2438mm	366lb	166kg
SY76583/2440-CAM	Standard	2"	51mm	6"	152mm	96"	2438mm	366lb	166kg

- Standard total back height: 34½" (876mm)
- Clip spacing: 25" (635mm)
- Forks ship complete with fork pin kit
- -CAM = Forks brought to you by CAM

- Altura total estándar del talón 34½" (876mm)
- Longitûd dentro del clip de Fijación 25" (635mm)
- Las horquillas se envían con un kit de pasadores
- CAM-Horquillas presentadas a ustedes por CAM

- Hauteur de dossier standard: 34½" (876mm)
- Espacement entre les attaches: 25" (635mm)
- Fourches livrées avec arrêts de fourches
- CAM = Forks offert par CAM

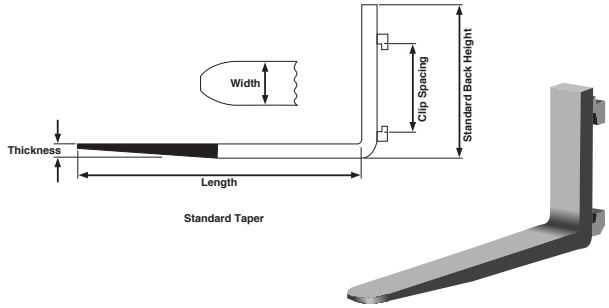

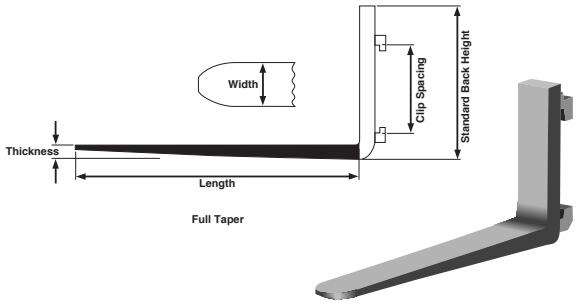

	Taper	Thickness ▼		Width		Applicable Length		Weight Per Fork	
SY1237631	Full & Polish	1½"	38mm	10"	250mm	48"	1219mm	306lb	138kg
SY43267/1220-CAM	Full & Polish	1½"	38mm	10"	250mm	48"	1219mm	308lb	140kg
SY42088/1220-CAM	Full & Polish	1½"	38mm	12"	300mm	48"	1219mm	363lb	165kg
SY43268/1220-CAM	Full & Polish	1¾"	44mm	10"	250mm	48"	1219mm	341lb	155kg
SY43269/1220-CAM	Full & Polish	2"	51mm	8"	200mm	48"	1219mm	286lb	130kg
SY7880/1220-CAM	Standard	2"	51mm	6"	152mm	48"	1219mm	250lb	114kg
SY7880/1370	Standard	2"	51mm	6"	152mm	54"	1370mm	250lb	114kg
SY7880/1370-CAM	Standard	2"	51mm	6"	152mm	54"	1370mm	250lb	114kg
SY7880/1525	Standard	2"	51mm	6"	152mm	60"	1524mm	288lb	131kg
SY7880/1525-CAM	Standard	2"	51mm	6"	152mm	60"	1524mm	288lb	131kg
SY7880/1830	Standard	2"	51mm	6"	152mm	72"	1829mm	327lb	149kg
SY7880/1830-CAM	Standard	2"	51mm	6"	152mm	72"	1829mm	327lb	149kg
SY7880/2440	Standard	2"	51mm	6"	152mm	96"	2438mm	407lb	185kg
SY7880/2440-CAM	Standard	2"	51mm	6"	152mm	96"	2438mm	407lb	185kg
SY7660/1065-CAM	Standard	2¼"	60mm	6"	152mm	42"	1067mm	268lb	122kg
SY7660/1220-CAM	Standard	2¼"	60mm	6"	152mm	48"	1219mm	288lb	131kg
SY7660/1370-CAM	Standard	2¼"	60mm	6"	152mm	54"	1370mm	296lb	142kg
SY7660/1525-CAM	Standard	2¼"	60mm	6"	152mm	60"	1372mm	335lb	152kg
SY7660/1830-CAM	Standard	2¼"	60mm	6"	152mm	72"	1524mm	383lb	174kg
SY7660/2440-CAM	Standard	2¼"	60mm	6"	152mm	96"	2438mm	482lb	219kg
SY4259/1065-CAM	Full & Polish	2¼"	60mm	6"	152mm	42"	1067mm	244lb	111kg
SY4259/1220-CAM	Full & Polish	2¼"	60mm	6"	152mm	48"	1219mm	257lb	117kg
SY4259/1525-CAM	Full & Polish	2¼"	60mm	6"	152mm	60"	1524mm	290lb	132kg
SY4259/1830-CAM	Full & Polish	2¼"	60mm	6"	152mm	72"	1830mm	317lb	144kg
SY4259/2440-CAM	Full & Polish	2¼"	60mm	6"	152mm	96"	2438mm	372lb	169kg
SY4186/1220	Standard	2½"	64mm	6"	152mm	48"	1219mm	291lb	132kg
SY4186/1220-CAM	Standard	2½"	64mm	6"	152mm	48"	1219mm	311lb	141kg
SY4186/1370-CAM	Standard	2½"	64mm	6"	152mm	54"	1372mm	319lb	145kg
SY4394/1525	Full & Polish	2½"	64mm	6"	152mm	60"	1524mm	331lb	150kg
SY4186/1525-CAM	Standard	2½"	64mm	6"	152mm	60"	1524mm	361lb	164kg
SY4186/1830	Standard	2½"	64mm	6"	152mm	72"	1829mm	397lb	180kg
SY4186/1830-CAM	Standard	2½"	64mm	6"	152mm	72"	1829mm	413lb	188kg
SY4186/2440	Standard	2½"	64mm	6"	152mm	96"	2438mm	550lb	250kg
SY4186/2440-CAM	Standard	2½"	64mm	6"	152mm	96"	2438mm	517lb	235kg

CLASS 2 & 3 CARPET RAMS BRAZOS CLASE 2 & 3 EPERONS DE CLASSE 2 & 3

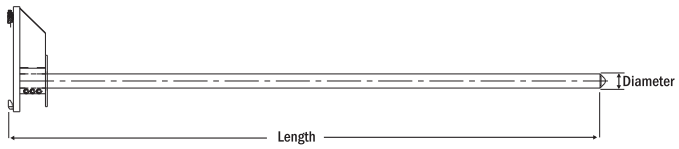

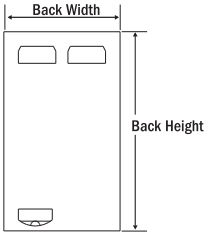

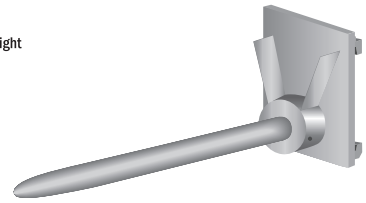

	Class	**Back Height ▼**		Back Width		Length		Diameter		Weight Per RAM		Capacity		Distance Between Fixing Brackets	
SYCFS-9	2	20½"	521mm	11½"	292mm	9.0'	2.7m	2¾"	70mm	397lb	180kg	2,500lb	1,134kg	16"	406mm
SYCFS-10	2	20½"	521mm	11½"	292mm	10.0'	3.0m	2¾"	70mm	421lb	191kg	2,200lb	998kg	16"	406mm
SYCFS-12	2	20½"	521mm	11½"	292mm	12.0'	3.7m	2¾"	70mm	478lb	217kg	1,800lb	816kg	16"	406mm
SYCFS-9/3	3	24½"	622mm	14"	356mm	9.0'	2.7m	2¾"	70mm	397lb	180kg	2,500lb	1,134kg	20"	508mm
SYCFS-10/3	3	24½"	622mm	14"	356mm	10.0'	3.0m	2¾"	70mm	421lb	191kg	2,200lb	998 kg	20"	508mm
SYCFS-12/3	3	24½"	622mm	14"	356mm	12.0'	3.7m	2¾"	70mm	478lb	217kg	1,800lb	816kg	20"	508mm

SHAFT MOUNT FORKS HORQUILLAS TIPO ANILLO FOURCHES PIN TYPE OU MONTÉES SUR ARBRE

- Centerline is defined as the measurment from the floor to the center of the eye
- Shaft mount location: Offset means toward the back of the fork. Inset means toward the front of the fork. In Line means the center of the eye is in line with the back of fork
- **Must purchase in pairs**

- Línea central – Del piso al centro del orificio
- DESPLAZAR = hacia la parte posterior de las horquillas, INSERTAR = hacia delante de la horquilla, EN LINEA = centro del orificio de acuerdo con la parte posterior de la horquilla
- Venta solo en pares

- Ligne médiane – plancher jusqu'au niveau des yeux
- DÉVIATION = vers l'arrière de la fourche - INCRUSTATION = vers l'avant de la fourche - ALIGNÉ = niveau de l'oeil aligné avc l'arrière de la fourche
- Doivent être achetées en paires

	Taper	**Thickness ▼**		Width		Applicable Length		Center Line		Tube I.D.		Shaft Mount Location		Weight Per Fork	
SY1237043	Standard	1½"	38mm	3"	80mm	42"	1070mm	22½"	572mm	1.78"	45mm	5/8"	16mm offset	101lb	46kg
SY1237044	Standard	1½"	38mm	3"	80mm	47"	1200mm	22½"	572mm	1.78"	45mm	5/8"	16mm offset	101lb	46kg
SY1237005	Standard	1½"	38mm	4"	102mm	48"	1220mm	20 1/16"	510mm	2.36"	60mm	13/16"	20mm offset	108lb	49kg
SY1237045	Standard	1½"	38mm	4"	102mm	42"	1067mm	22 13/32"	569mm	2.06"	52mm	61/64"	24mm offset	99lb	45kg
SY1237046	Standard	1½"	38mm	4"	102mm	47"	1200mm	22 13/32"	569mm	2.06"	52mm	61/64"	24mm offset	112lb	51kg
SY1237047	Standard	1½"	38mm	5"	125mm	47"	1200mm	22 13/32"	569mm	2.06"	52mm	63/64"	25mm offset	139lb	63kg
SY1237119	Full Taper	1½"	38mm	6"	152mm	60"	1525mm	24"	610mm	2.31"	58mm	½"	12mm offset	179lb	81kg
SY1237051	Standard	1¾"	45mm	4"	102mm	42"	1067mm	22 7/16"	570mm	2.06"	52mm	63/64"	25mm offset	101lb	46kg
SY1237052	Standard	1¾"	45mm	4"	102mm	47"	1200mm	22 7/16"	570mm	2.06"	52mm	63/64"	25mm offset	120lb	54kg
SY1237306	Standard	1¾"	45mm	4"	102mm	48"	1220mm	22"	558mm	2.06"	52mm	1/8"	3mm offset	120lb	54kg
SY1237034	Standard	1¾"	45mm	5"	125mm	48"	1220mm	28 11/32"	720mm	2.44"	62mm		In line	115lb	52kg
SY1237120	54" Taper	1¾"	45mm	7"	177mm	60"	1525mm	24 1/8"	612mm	2.31"	58mm	½"	13mm offset	243lb	110kg
SY1237217	47" Taper	1¾"	45mm	7"	177mm	60"	1525mm	24 1/16"	613mm	2.02"	51mm	1/8"	3mm offset	266lb	121kg
SY1237307	Standard	2"	51mm	2"	51mm	48"	1220mm	19 27/32"	504mm	2.06"	52mm	¼"	6mm offset	75lb	34kg
SY1237376	Standard	2"	51mm	2"	51mm	48"	1220mm	20 21/32"	525mm	2.36"	60mm	1/8"	3mm offset	82lb	38kg
SY1237218	Standard	2"	51mm	2"	51mm	48"	1220mm	22"	558mm	2.02"	51mm	1/8"	3mm offset	75lb	34kg
SY1237121	Standard	2"	51mm	2"	51mm	48"	1220mm	24 1/8"	612mm	2.31"	58mm	½"	13mm offset	77lb	35kg
SY1237219	Standard	2"	51mm	2"	51mm	48"	1220mm	25¼"	640mm	2.10"	53mm	1/8"	3mm offset	81lb	37kg
SY1237308	Standard	2"	51mm	4"	102mm	48"	1220mm	20 3/16"	512mm	2.06"	52mm	¼"	6mm offset	127lb	57kg
SY1237309	Standard	2"	51mm	4"	102mm	48"	1220mm	27 3/16"	690mm	1.97"	50mm	¼"	6mm offset	141lb	64kg
SY1237035	Standard	2"	51mm	4"	102mm	48"	1220mm	28 11/32"	720mm	2.44"	62mm		In line	131lb	60kg
SY1237036	Standard	2"	51mm	4"	102mm	48"	1220mm	21½"	546mm	2.44"	62mm	5/16"	8mm offset	126lb	57kg
SY1237122	Standard	2"	51mm	4"	102mm	48"	1220mm	24 5/32"	609mm	2.31"	58mm	½"	13mm offset	141lb	64kg
SY1237049	Standard	2"	51mm	4"	102mm	42"	1067mm	22 7/16"	570mm	2.28"	58mm	1 1/16"	27mm offset	122lb	55kg

	Taper	Thickness ▼		Width		Applicable Length		Center Line		Tube I.D.		Shaft Mount Location		Weight Per Fork	
SY1237050	Standard	2"	51mm	4"	102mm	47"	1200mm	22 7/16"	570mm	2.28"	58mm	1 1/16"	27mm offset	131lb	60kg
SY1237377	Standard	2"	51mm	4"	102mm	48"	1220mm	20 21/32"	525mm	2.10"	53mm		In line	131lb	60kg
SY1237037	Standard	2"	51mm	4"	102mm	48"	1220mm	20¾"	528mm	2.10"	53mm		In line	131lb	60kg
SY1237038	Standard	2"	51mm	4"	102mm	60"	1525mm	20¾"	528mm	2.10"	53mm		In line	154lb	70kg
SY1237310	Standard	2"	51mm	4"	102mm	60"	1525mm	25 7/32"	640mm	1.97"	50mm	¼"	6mm offset	163lb	74kg
SY1237039	Standard	2"	51mm	4"	102mm	72"	1830mm	20¾"	528mm	2.06"	52mm		In line	180lb	82kg
SY1237216	Standard	2"	51mm	4"	102mm	48"	1220mm	24"	610mm	2.02"	51mm	⅛"	3mm offset	135lb	61kg
SY1237048	Standard	2"	51mm	4¾"	120mm	47"	1200mm	22 7/16"	570mm	2.28"	58mm	1⅛"	29mm offset	165lb	75kg
SY1237021	Standard	2"	51mm	5"	127mm	42"	1070mm	21½"	546mm	1.57"	40mm	¾"	19mm inset	147kg	67kg
SY1237022	Standard	2"	51mm	5"	127mm	48"	1220mm	21½"	546mm	1.57"	40mm	¾"	19mm inset	165lb	75kg
SY1237023	Standard	2"	51mm	5"	127mm	54"	1370mm	21½"	546mm	1.57"	40mm	¾"	19mm inset	180lb	82kg
SY1237024	Standard	2"	51mm	5"	127mm	60"	1525mm	21½"	546mm	1.57"	40mm	¾"	19mm inset	198lb	90kg
SY1237025	Standard	2"	51mm	5"	127mm	72"	1830mm	21½"	546mm	1.57"	40mm	¾"	19mm inset	231lb	105kg
SY1237123	Standard	2"	51mm	5"	127mm	48"	1220mm	22⅛"	562mm	2.42"	62mm	3/16"	4mm offset	170lb	77kg
SY1237378	Standard	2"	51mm	5"	127mm	60"	1525mm	21 3/16"	538mm	2.32"	59mm	⅛"	3mm offset	205lb	93kg
SY1237311	Full Taper	2"	51mm	6"	152mm	60"	1525mm	20 5/16"	515mm	2.06"	52mm		In line	198lb	90kg
SY1237312	Full Taper	2"	51mm	6"	152mm	60"	1525mm	24 3/16"	614mm	2.06"	52mm	¼"	6mm offset	215lb	98kg
SY1237214	Standard	2"	51mm	6"	152mm	72"	1830mm	20"	508mm	2.12"	54mm		In line	273lb	124kg
SY1237124	Standard	2"	51mm	6"	152mm	72"	1830mm	24¼"	615mm	2.31"	58mm	½"	13mm offset	249lb	114kg
SY1237313	Standard	2⅜"	60mm	4"	102mm	42"	1065mm	25 3/16"	639mm	2.06"	52mm	¼"	6mm offset	145lb	66kg
SY1237041	Standard	2⅜"	60mm	4"	102mm	48"	1220mm	21"	533mm	2.25"	60mm		In line	156lb	71kg
SY1237040	Standard	2⅜"	60mm	4"	102mm	60"	1525mm	21"	533mm	2.25"	60mm		In line	187lb	85kg
SY1237042	Standard	2⅜"	60mm	4"	102mm	72"	1220mm	21"	533mm	2.25"	60mm		In line	218lb	99kg
SY1237375	Standard	2⅜"	60mm	4"	102mm	60"	1220mm	21 3/16"	538mm	2.32"	59mm		In line	189lb	86kg
SY1237006	26" Taper	2⅜"	60mm	4"	102mm	48"	1220mm	24"	610mm	2.06"	52mm	¼"	6mm offset	168lb	76kg
SY1237125	Standard	2⅜"	60mm	4"	102mm	48"	1220mm	24 5/32"	609mm	2.31"	58mm	½"	13mm offset	161lb	73kg
SY1237004	30" Taper	2⅜"	60mm	5"	127mm	48"	1220mm	20¼"	514mm	2.32"	59mm		In line	198lb	90kg
SY1237126	Standard	2⅜"	60mm	5"	127mm	48"	1220mm	24⅛"	612mm	2.31"	58mm	½"	13mm offset	207lb	97kg
SY1237215	Standard	2⅜"	60mm	6"	152mm	60"	1525mm	20½"	521mm	2.32"	59mm		In line	275lb	125kg
SY1237127	Standard	2⅜"	60mm	6"	152mm	60"	1525mm	24¼"	615mm	2.31"	58mm	½"	13mm offset	269lb	122kg
SY1237314	Standard	2⅜"	60mm	6"	152mm	60"	1525mm	25 13/16"	639mm	2.06"	52mm	3/16"	4mm offset	189lb	86kg
SY1237633	Standard	2⅜"	60mm	6"	152mm	42"	1220mm	34¼"	870mm	2.53"	65mm	⅛"	3mm inset	293lb	133kg
SY1237634	Standard	2⅜"	60mm	6"	152mm	72"	1830mm	34¼"	870mm	2.53"	65mm	⅛"	3mm inset	376lb	171kg
SY1237090	Standard	2⅜"	60mm	6"	152mm	96"	2440mm	34¼"	870mm	2.53"	65mm	⅛"	3mm inset	460lb	209kg
SY1237007	Standard	2⅜"	60mm	6"	152mm	60"	1525mm	35 13/16"	893mm	2.32"	59mm	½"	13mm inset	330lb	150kg
SY1237008	Standard	2⅜"	60mm	6"	152mm	72"	1830mm	35 13/16"	893mm	2.32"	59mm	½"	13mm inset	360lb	164kg
SY1237009	Standard	2⅜"	60mm	6"	152mm	96"	2440mm	35 13/16"	893mm	2.32"	59mm	½"	13mm inset	460lb	209kg
SY1237010	Standard	2⅜"	60mm	6"	152mm	48"	1220mm	35½"	902mm	2.50"	64mm	¼"	6mm inset	273lb	124kg
SY1237011	Standard	2⅜"	60mm	6"	152mm	54"	1370mm	35½"	902mm	2.50"	64mm	¼"	6mm inset	295lb	135kg
SY1237012	Standard	2⅜"	60mm	6"	152mm	60"	1520mm	35½"	902mm	2.50"	64mm	¼"	6mm inset	319lb	145kg
SY1237013	Standard	2⅜"	60mm	6"	152mm	72"	1830mm	35½"	902mm	2.50"	64mm	¼"	6mm inset	368lb	168kg
SY1237014	Standard	2⅜"	60mm	6"	152mm	96"	2440mm	35½"	902mm	2.50"	64mm	¼"	6mm inset	462lb	210kg
SY1237015	Standard	2½"	65mm	8"	203mm	48"	1220mm	34 13/16"	884mm	3.07"	78mm	⅜"	10mm inset	400lb	182kg
SY1237016	Standard	2½"	65mm	8"	203mm	54"	1370mm	34 13/16"	884mm	3.07"	78mm	⅜"	10mm inset	451lb	205kg
SY1237017	Standard	2½"	65mm	8"	203mm	72"	1830mm	34 13/16"	884mm	3.07"	78mm	⅜"	10mm inset	501lb	228kg
SY1237018	Standard	2½"	65mm	8"	203mm	96"	2440mm	34 13/16"	884mm	3.07"	78mm	⅜"	10mm inset	675lb	307kg
SY1237635	Standard	3½"	90mm	8"	203mm	72"	1830mm	39 7/16"	1002mm	3.03"	77mm	¾"	20mm offset	772lb	351kg
SY1237636	Standard	3½"	90mm	8"	203mm	96"	2440mm	39 7/16"	1002mm	3.03"	77mm	¾"	20mm offset	935lb	425kg

SPECIAL ORDER SHAFT MOUNT FAX FORM

FORMULARIO ESPECIAL DE FAX PARA ORDENAR HORQUILLAS TIPO BARRO

FORMULAIRE DE COMMANDE SPÉCIALE POUR ARBRE DE MONTAGE

This form can be downloaded from www.tvh.com

Company Name: _____

Your Name: _____

Address: _____

Number of Pieces: _____ Truck Make: _____

Phone Number: _____ Model: _____

Fax Number: _____ Capacity: _____

TOTALSOURCE® Part Number: P.O. Number:

Tips (Check Your Choice)

1A. ❒

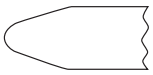

1B. ❒

1C. ❒

1D. ❒

Tapers (Check Your Choice)

2A. Standard Taper ❒

2B. Full Taper ❒

2C. Full Taper & Polish ❒

Shaft Type Forks

3._____ To Centerline of Tube
4._____ Inset
5._____ Offset
6._____ Thickness
7._____ Width
8._____ Length
9._____ Inline
10._____ Outside Diameter (O.D.)
11._____ Inside Diameter (I.D.)
_____ Shaft Diameter

Clearance Must Exist Between Shaft and Tube I.D.

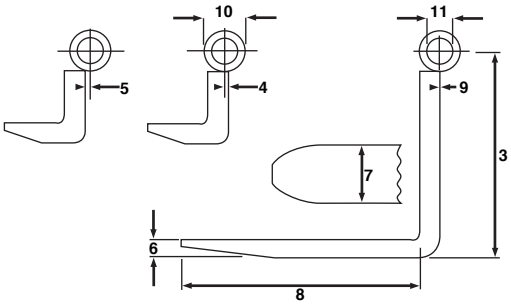

Tube Specifications

12._____ Angle of Slot
13._____ Depth of Slot
14._____ Location of Slot
15._____ Slot Width
16._____ Tube Length

Note: If No Slot in Tube Only Dim. 16 Required

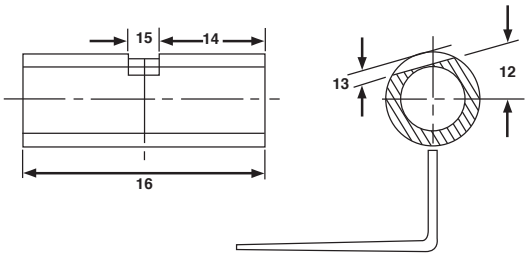

SPECIAL ORDER CLIP MOUNT FAX FORM

FORMULARIO ESPECIAL DE FAX PARA ORDENAR HORQUILLAS TIPO GANCHO

FORMULAIRE DE COMMANDE SPÉCIALE POUR SUPPORT DE MONTAGE

This form can be downloaded from www.tvh.com

Company Name: _____

Your Name: _____

Address: _____

Number of Pieces: _____ Truck Make: _____

Phone Number: _____ Model: _____

Fax Number: _____ Capacity: _____

TOTALSOURCE® Part Number: P.O. Number:

Tips (Check Your Choice)

1A. ❐

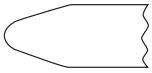

1B. ❐

1C. ❐

1D. ❐

Tapers (Check Your Choice)

2A. Standard Taper ❐

2B. Full Taper ❐

2C. Full Taper & Polish ❐

Non Standard Clip Forks
(With Square Carriage)

3._____ Distance Between Hangers*
4._____ Distance From Ground to top Hanger
5._____ Carriage Thickness + .06
6._____ Carriage Thickness + .06
7._____ Thickness
8._____ Width
9._____ Length
10._____ Shank Height
11._____ Measure Between Tips

*3 = Distance to Outside of Carriage Bars Plus Clearance

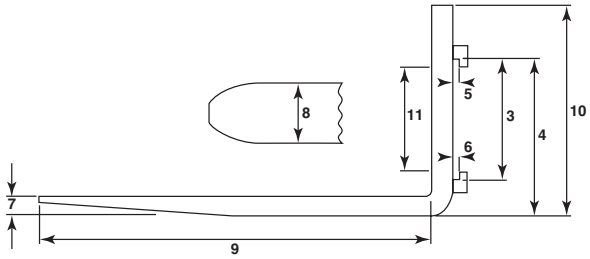

		Class ▼	A	B	C	D
SY41870	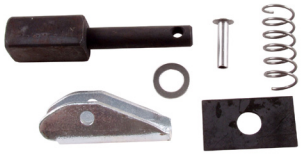 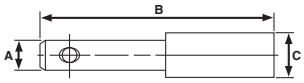	2	3/8" 10mm	3 1/16" 78mm	1/2" 13mm	
SY41865	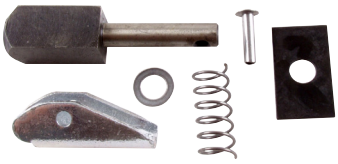 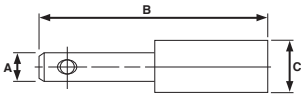	2	3/8" 10mm	3 1/4" 83mm	11/16" 18mm	
SY85862	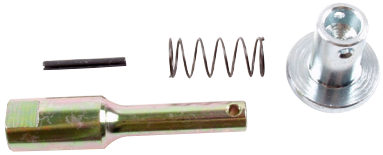 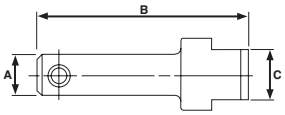	2	7/16" 11mm	3 3/8" 86mm	5/8" 16mm	
SY34596	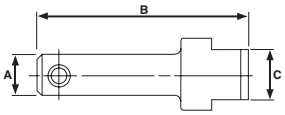	2	7/16" 11mm	2 1/4" 57mm	1/2" 13mm	
SY1237131	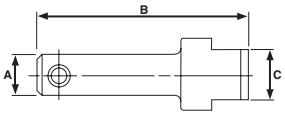	2	1/2" 13mm	2 1/2" 64mm	34/64" 14mm	
SY41850	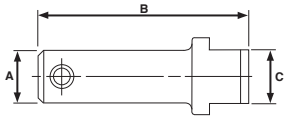	2	1/2" 13mm	2 3/64" 52mm	5/8" 16mm	
SY34708	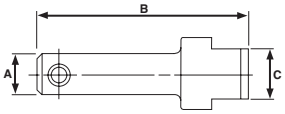	2	1/2" 13mm	2 1/2" 64mm	1/2" 13mm	
SY34055	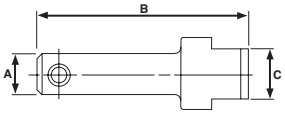	2	1/2" 13mm	2 11/16" 68mm	1/2" 13mm	

	Class ▼	A	B	C	D
SY41810	2	½" 13mm	2 1/16" 52mm	½" 13mm	
SY41815	2	½" 13mm	2 3/16" 56mm	5/8" 16mm	
SY41825-CN	2	1/2" 13mm	2 3/8" 55mm	19/32" 15mm	
SY41825	2	5/8" 16mm	2 1/16" 52mm	5/8" 16mm	
SY41835	2	5/8" 16mm	2 1/16" 52mm	½" 13mm	
SY41840	2	5/8" 16mm	2 1/8" 54mm	5/8" 16mm	
SY85846	2	5/8" 16mm	2¼" 57mm	5/8" 16mm	
SY85861	2	5/8" 16mm	3¼" 83mm	1¼" 32mm	

		Class ▼	A	B	C	D
SY41880	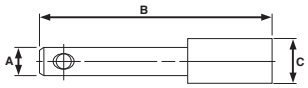	3	7/16" 11mm	3 7/16" 87mm	1/2" 13mm	
SY1237130	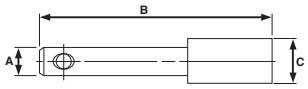	3	1/2" 13mm	2 27/64" 62mm	43/64" 17mm	
SY32727	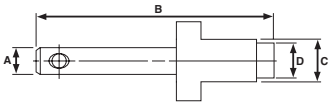	3	1/2" 13mm	2 1/4" 57mm	13/16" 21mm	19/32" 15mm
SY34707	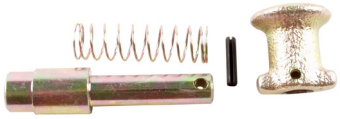 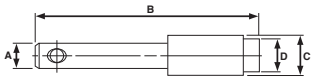	3	1/2" 13mm	3" 76mm	11/16" 18mm	5/8" 16mm
SY41830	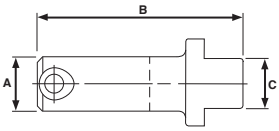	3	5/8" 16mm	2 1/16" 52mm	5/8" 16mm	
SY41830-CN	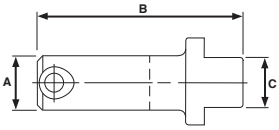	3	5/8" 16mm	2 3/8" 60mm	19/32" 15mm	
SY41820	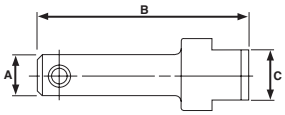	4	1/2" 13mm	2 9/16" 65mm	5/8" 16mm	
SY41860	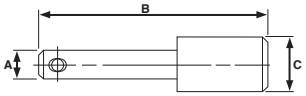	4	3/8" 10mm	3 1/8" 79mm	11/16" 18mm	

FORK PIN KITS KITS DE PASADORES KITS DE ARRÊTS DE FOURCHES

	Class ▼	A	B	C	D
SY41875	4	7/16" 11mm	3 13/16" 97mm	11/16" 18mm	
SY31744	4	9/16" 14mm	2 5/8" 67mm	7/8" 22mm	5/8" 16mm
SY1237144	4	1/2" 13mm	3 19/32" 65mm	1/2" 22mm	
SY1237145	4	5/8" 16mm	2 5/8" 66mm	5/8" 16mm	
SY41840-CN	4	5/8" 16mm	2 3/4" 69mm	5/8" 16mm	

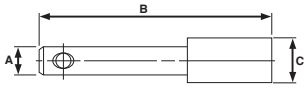

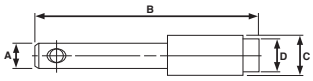

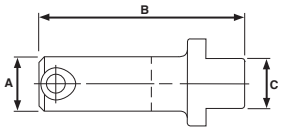

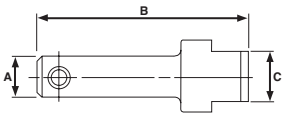

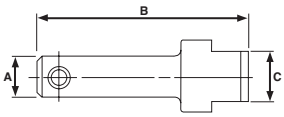

FORK ACCESSORIES ACCESORIOS PARA HORQUILLAS ACCESSOIRES DE FOURCHES

Fork Caliper

SY41950

- Instruction sheet is included with fork caliper
- The Industrial Truck Association and fork manufacturers suggest that the fork arms be replaced when the thickness of the blade has worn 10% from the original size

Fork Inspection kit

SY1237638

- Instruction sheet is included

Fork Stress Crack Detection Kit

SY41800

- 3 part, non-destructive test accurately shows cracks in the bend and weld areas of forks
- Ship ground only
- Kit includes:
  - 1 can of cleaner/remover
  - 1 can of penetrant
  - 1 can of developer
  - Instructions

- Each extension includes a non-removable loop designed to prevent the extension from sliding off the end of the fork
- ANSI 56.1 Compliant
- Powder coat safety yellow finish for durability
- All-steel construction for years of reliable use
- Each extension includes warning and operating stickers
- Sold in pairs

- Cada extensión incluye un arco no removible diseñado para impedir que la extensión se deslice fuera de la horquilla
- Cumple la norma ANSI 56.1
- Fabricado completamente en acero para uso confiable durante años
- Acabado con recubrimiento electrostático de pintura en polvo
de color amarillo de seguridad para una mayor durabilidad
- Cada extensión incluye etiquetas de advertencia y operación
- Se venden en parejas

- Chaque rallonge comprend une boucle non démontable conçue pour empêcher la rallonge de glisser en dehors de la fourche
- Conforme à ANSI 56.1
- Construction tout acier pour plusieurs années d'utilisation fiable
- Fini à revêtement en poudre jaune sécurité durable
- Chaque rallonge comprend des autocollants d'avertissement et d'exploitation
- Vendues par paires

Maximum Fork Thickness	**Maximum Fork Width ▼**	Minimum Fork Length			Length		Load Center of Extension		Maximum Load Capacity (per pair)	
2" 51mm	4" 102mm	32"	813mm	SYEXT4X48	48"	1219mm	24"	610mm	4,852lb	2,201kg
		36"	914mm	SYEXT4X54	54"	1372mm	27"	685mm	4,387lb	1,990kg
		40"	1016mm	SYEXT4X60	60"	1524mm	30"	762mm	4,103lb	1,861kg
		48"	1219mm	SYEXT4X72	72"	1829mm	36"	914mm	3,704lb	1,680kg
		56"	1420mm	SYEXT4X84	84"	2134mm	42"	1067mm	3,404lb	1,544kg
		64"	1625mm	SYEXT4X96	96"	2438mm	48"	1219mm	3,203lb	1,453kg
	5" 127mm	32"	813mm	SYEXT5X48	48"	1219mm	24"	610mm	6,792lb	3,081kg
		36"	914mm	SYEXT5X54	54"	1372mm	27"	685mm	6,142lb	2,786kg
		40"	1016mm	SYEXT5X60	60"	1524mm	30"	762mm	5,706lb	2,588kg
		48"	1219mm	SYEXT5X72	72"	1829mm	36"	914mm	5,205lb	2,361kg
		56"	1420mm	SYEXT5X84	84"	2134mm	42"	1067mm	4,804lb	2,179kg
		64"	1625mm	SYEXT5X96	96"	2438mm	48"	1219mm	4,603lb	2,088kg
	6" 152mm	32"	813mm	SYEXT6X48	48"	1219mm	24"	610mm	8,735lb	3,962kg
		36"	914mm	SYEXT6X54	54"	1372mm	27"	685mm	7,897lb	3,582kg
		40"	1016mm	SYEXT6X60	60"	1524mm	30"	762mm	7,306lb	3,314kg
		48"	1219mm	SYEXT6X72	72"	1829mm	36"	914mm	6,605lb	2,996kg
		56"	1420mm	SYEXT6X84	84"	2134mm	42"	1067mm	6,206lb	2,815kg
		64"	1625mm	SYEXT6X96	96"	2438mm	48"	1219mm	5,906lb	2,679kg

Fork Protectors

- Protective Buffer - Provides cushioned non-slip surface between cargo and steel lift truck forks eliminating costly damage experienced during loading and unloading process
- Non-slip Surface - Cargo remains securely positioned while in transit
- Polyurethane - Engineered to provide durability and unmatched service life
- Easy to install - Slides over standard lift truck forks and remains secure with provided mounting hardware
- OEM Attachment - Designed to exact OEM specifications
- Ready to ship - Popular sizes in stock for immediate shipment
- Sold each

	Length ▼	Width
SYFRKP-4X30	4.00" 102mm	30.00" 762mm
SYFRKP-4X32	4.00" 102mm	32.00" 813mm
SYFRKP-4X36	4.00" 102mm	36.00" 914mm
SYFRKP-4X42	4.00" 102mm	42.00" 1067mm
SYFRKP-4X48	4.00" 102mm	48.00" 1219mm
SYFRKP-4X60	4.00" 102mm	60.00" 1524mm

	Length ▼	Width
SYFRKP-5X36	5.00" 127mm	36.00" 914mm
SYFRKP-5X42	5.00" 127mm	42.00" 1067mm
SYFRKP-5X48	5.00" 127mm	48.00" 1219mm
SYFRKP-5X54	5.00" 127mm	54.00" 1372mm
SYFRKP-5X55	5.00" 127mm	55.00" 1397mm
SYFRKP-5X60	5.00" 127mm	60.00" 1524mm

	Length ▼	Width
SYFRKP-6X36	6.00" 152mm	36.00" 914mm
SYFRKP-6X48	6.00" 152mm	48.00" 1219mm
SYFRKP-6X54	6.00" 152mm	54.00" 1372mm
SYFRKP-6X55	6.00" 152mm	55.00" 1397mm
SYFRKP-6X60	6.00" 152mm	60.00" 1524mm

Fork Heel Protector

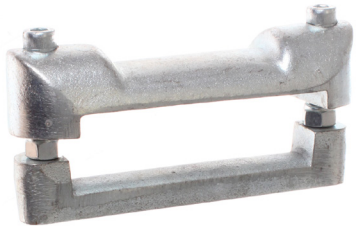

- Used to prevent wear around the blade and heel. Fits neatly onto the heel to prevent them from dragging on the ground.

▼	Size
SYFRKFP-4	4.00" 80mm -100mm
SYFRKFP-5	5.00" 120mm -130mm
SYFRKFP-6	6.00" 152mm
SYFRKFP-8	8.00" 203mm

Load Cushion

- Protective barrier between the load and the back of the forks. Made from heavy duty molded rubber. Fits to rear face of forks. Absorbs impact.

▼	Size
SYFRKLC-4	4.00" 80mm - 100mm
SYFRKLC-5	5.00" 120mm - 130mm
SYFRKLC-6	8.00" 203mm
SYFRKLC-8	6.00" 152mm

FORK WEAR PADS ALMOHADILLAS DE DESGASTE PARA HORQUILLAS PATINS D'USURE DE FOURCHES

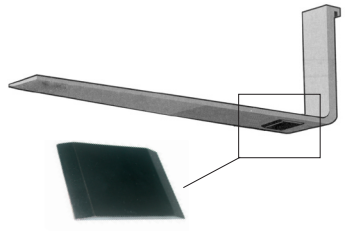

• 5mm wear thickness (+ 1mm adhesive) and 100mm length stick firmly onto the bottom of the heel

▼	Size
SY73048	0.24"" x 3.94" 6mm x 100mm
SY73049	0.16" x 3.94" 4mm x 100mm

FORK DOLLY MANIPULADOR DE HORQUILLAS MANIPULATEUR DE FOURCHES

▼				
SY41866		One fork capacity 2¾" x 6½" (70mm x 165mm)	A safe and easy way to move your forks or mount them on a carriage	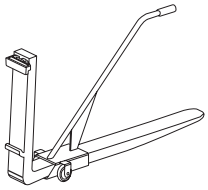
SY41868		Two fork capacity 2¾" x 12½" (70mm x 318mm)	A safe and easy way to move your forks or mount them on a carriage	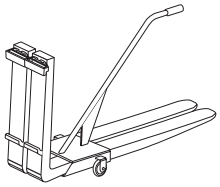

Domestic
Nominal Loads for Lift Trucks
- Pounds x LC in Inch, for Static Load
- Safety Factor = 3.1
- Width in Inch (mm)

Thickness	4.00" 100mm	5.00" 125mm	6.00" CL3 150mm
1.38" 35mm	3000x24		
1.50" 40mm	5500x24	5700x24	
1.75" 45mm	5900x24	7400x24	
2.00" 50mm		9700x24	11600x24
2.36" 60mm			
2.50" 65mm			

Cargas nominales para Montacargas
- Libras X LC (capacidad perdida) en pulgadas, para carga estática
- Ancho en Pulgadas (mm)

Thickness	6.00" CL4 150mm	7.00" 180mm	8.00" 200mm
1.38" 35mm			
1.50" 40mm			
1.75" 45mm			
2.00" 50mm	12000x24	13700x24	15000x24
2.36" 60mm	16300x24		
2.50" 65mm	17500x24		

CAM
Nominal Loads for Lift Trucks
- Safety Factor = 3.1
- Material Grade: 15837H

Cargas nominales para Montacargas
- Calidad del Material: 15B37H

Size	KG per pair	600MM L/C								
Class 2		**100mm**	**120mm**	**122mm**	**125mm**	**150mm**	**180mm**	**200mm**	**250mm**	**300mm**
35mm		1700 x 600								
40mm		2500 x 600								
40mm			2500 x 600							
40mm						2500 x 600				
40mm							4400 x 600			
45mm		2500 x 600								
45mm	2500 x 600			2500 x 600						
45mm	2500 x 600				2500 x 600					
Class 3		**100mm**	**120mm**	**122mm**	**125mm**	**150mm**	**180mm**	**200mm**	**250mm**	**300mm**
40mm						3700 x 600				
40mm							4400 x 600			
40mm								4500 x 600		
45mm				3800 x 600						
45mm					3800 x 600					
45mm							4500 x 600			
50mm		3800 x 600								
50mm				4500 x 600						
50mm					4500 x 600					
50mm						4500 x 600				
Class 4		**100mm**	**120mm**	**122mm**	**125mm**	**150mm**	**180mm**	**200mm**	**250mm**	**300mm**
50mm						5800 x 600				
60mm						8000 x 600				
65mm						8000 x 600				
50mm							7000 x 600			
50mm								7700 x 600		
40mm									6200 x 600	
45mm									8700 x 600	
40mm										6600 x 600

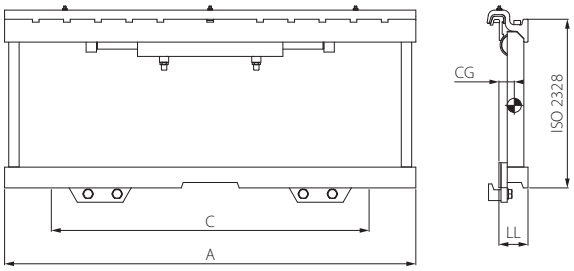

CAM attachments

- #6 JIC Fittings
- Place loads quickly without repositioning the truck
- Hydraulic cylinder can be easily disassembled for complete maintenance
- Replacement parts available
- 2 year warranty

- Graseras JIC #6
- Coloca las cargas con rapidez sin tener que reposicionar el montacargas
- El cilindro se puede desmontar fácilmente para darle un mantenimiento completo
- Tienen repuestos disponibles
- 2 años de garantía

- Raccords JIC No 6
- Placez les charges rapidement sans repositionner le camion
- Le vérin hydraulique peut être facilement démonté pour un entretien complet
- Pièces de rechange disponibles
- Garantie 2 ans

▼	Capacity		A	C	LL	CG	Weight		Class
SY225.082	5,500lb	2,500kg	31.5"	27.6"	2.7"	1.3"	95lb	43kg	2
SY225.092	5,500lb	2,500kg	36.2"	31.5"	2.7"	1.4"	103lb	47kg	2
SY225.093	5,500lb	2,500kg	36.6"	31.5"	2.7"	1.4"	104lb	47kg	2
SY225.094	5,500lb	2,500kg	37.0"	31.5"	2.7"	1.4"	106lb	48kg	2
SY225.098	5,500lb	2,500kg	38.6"	33.5"	2.7"	1.4"	108lb	49kg	2
SY225.100	5,500lb	2,500kg	39.4"	33.5"	2.7"	1.4"	110lb	50kg	2
SY225.104	5,500lb	2,500kg	41.0"	33.5"	2.7"	1.4"	114lb	52kg	2
SY225.107	5,500lb	2,500kg	42.1"	34.2"	2.7"	1.4"	116lb	53kg	2
SY225.110	5,500lb	2,500kg	43.3"	35.4"	2.7"	1.4"	119lb	54kg	2
SY225.115	5,500lb	2,500kg	45.3"	35.4"	2.7"	1.4"	123lb	56kg	2
SY225.122	5,500lb	2,500kg	48.3"	39.4"	2.7"	1.4"	143lb	65kg	2
SY225.140	5,500lb	2,500kg	55.1"	39.4"	2.7"	1.4"	165lb	75kg	2
SY335.096	6,500lb	3,000kg	37.7"	35.4"	3.2"	1.8"	185lb	84kg	3
SY335.100	6,500lb	3,000kg	39.3"	37.4"	3.2"	1.8"	196lb	89kg	3
SY350.100	12,000lb	5,500kg	39.4"	35.4"	3.2"	1.5"	253lb	115kg	3
SY335.102	6,500lb	3,000kg	40.1"	39.4"	3.2"	1.8"	207lb	94kg	3
SY350.102	12,000lb	5,500kg	40.1"	37.4"	3.2"	1.5"	253lb	115kg	3
SY335.115	6,500lb	3,000kg	45.3"	39.4"	3.2"	1.8"	218lb	99kg	3
SY350.115	12,000lb	5,500kg	45.3"	37.4"	3.2"	1.5"	275lb	125kg	3
SY335.120	6,500lb	3,000kg	47.3"	39.4"	3.2"	1.8"	231lb	105kg	3
SY350.120	12,000lb	5,500kg	47.3"	39.4"	3.2"	1.5"	297lb	135kg	3
SY335.150	6,500lb	3,000kg	59.0"	43.3"	3.2"	1.8"	264lb	120kg	3
SY350.150	12,000lb	5,500kg	59.0"	49.2"	3.2"	1.5"	350lb	159kg	3
SY460.119	15000lb	6,500kg	46.8"	41.3"	3.9"	2.2"	496lb	225kg	4
SY460.150	15000lb	6,500kg	59.0"	51.2"	3.9"	2.2"	640lb	290kg	4
SY480.150	18,000lb	8,000kg	59.0"	51.2"	3.9"	2.2"	695lb	315kg	4
SY460.180	15000lb	6,500kg	70.9"	59.1"	3.9"	2.2"	683lb	310kg	4
SY480.180	18,000lb	8,000kg	70.9"	59.1"	3.9"	2.2"	701lb	318kg	4
SY480.200	18,000lb	8,000kg	78.8"	65.0"	3.9"	2.2"	732lb	332kg	4

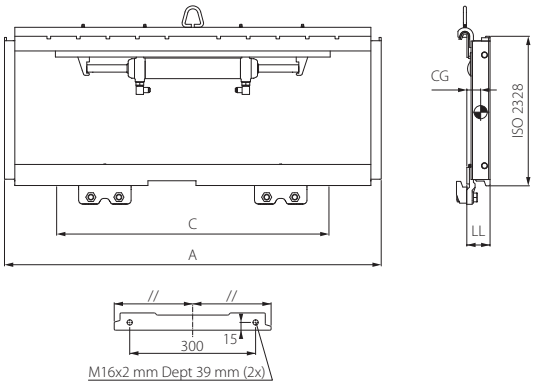

- Available in the popular ISO Class 2 and 3
- Cylinder can easily be removed for maintenance and replacement
- Equipped with pre-drilled holes for mounting of load backrest
- All wear parts are equipped with grease zerk
- Slim profile to reduce lost load
- Quick installation options and easy to maintain
- High wear replacement parts available

- Disponible en las clases populares ISO 2 y 3
- El cilindro se puede quitar fácilmente para su mantenimiento o reemplazo
- Equipado con huecos pre-taladrados para el montaje de la rejilla protectora de carga
- Todas las piezas de desgaste están equipados con graseras
- Tiene un perfi l delgado para reducir la pérdida de capacidad de carga
- La instalación es rápida y son de fácil mantenimiento
- Tenemos repuestos para las piezas que comúnmente se desgastan primero

- Disponible dans les classes populaires 2 et 3 de ISO
- Le cylindre peut être facilement enlevé pour entretien ou remplacement
- Équipé de trous percés au préalable pour le montage du dossier d'appui de charge
- Toutes les pièces d'usure sont équipées de graisseurs
- Un profil étroit qui réduit la perte de charge
- Options d'installation rapide et entretien facile
- Des pièces de remplacement résistantes à l'usure

▼	Capacity		A	C	LL	CG	VCG	Weight		Class
SY225.080-SLIM	5,500lb	2,500kg	31.5"	31.5"	2.5"	1.3"	9.2"	101lb	46kg	2
SY225.092-SLIM	5,500lb	2,500kg	36.2"	31.5"	2.5"	1.3"	9.0"	110lb	50kg	2
SY225.094-SLIM	5,500lb	2,500kg	37.0"	31.5"	2.5"	1.3"	9.0"	112lb	51kg	2
SY225.098-SLIM	5,500lb	2,500kg	38.6"	31.5"	2.5"	1.3"	8.9"	114lb	52kg	2
SY225.100-SLIM	5,500lb	2,500kg	39.4"	31.5"	2.5"	1.3"	8.9"	116lb	53kg	2
SY225.104-SLIM	5,500lb	2,500kg	41.0"	31.5"	2.5"	1.3"	8.8"	121lb	55kg	2
SY225.107-SLIM	5,500lb	2,500kg	42.1"	31.5"	2.5"	1.3"	8.7"	123lb	56kg	2
SY225.110-SLIM	5,500lb	2,500kg	43.3"	31.5"	2.5"	1.3"	8.7"	125lb	57kg	2
SY225.115-SLIM	5,500lb	2,500kg	45.3"	31.5"	2.5"	1.3"	8.6"	141lb	64kg	2
SY225.125-SLIM	5,500lb	2,500kg	49.2"	39.4"	2.5"	1.3"	8.6"	145lb	66kg	2
SY225.140-SLIM	5,500lb	2,500kg	55.1"	39.4"	2.5"	1.3"	8.5"	158lb	72kg	2
SY335.100-SLIM	6,500lb	3,000kg	39.4"	39.4"	2.7"	1.3"	11.8"	143lb	65kg	3
SY335.102-SLIM	6,500lb	3,000kg	40.1	39.4"	2.7"	1.3"	11.7"	150lb	68kg	3
SY335.115-SLIM	6,500lb	3,000kg	45.3"	39.4"	2.7"	1.3"	11.6"	159lb	72kg	3
SY335.120-SLIM	6,500lb	3,000kg	47.3"	39.4"	2.7"	1.3"	11.6"	165lb	75kg	3
SY335.130-SLIM	6,500lb	3,000kg	51.2"	39.4"	2.7"	1.3"	11.5"	174lb	79kg	3
SY335.140-SLIM	6,500lb	3,000kg	55.1"	43.3"	2.7"	1.3"	11.4"	198lb	90kg	3

- Rack-like extension
- High wear replacement parts available
- Fits TRF and SH side shifts
- Fits PH and PHT fork positioners

- Extensión en forma de rack
- Piezas de repuesto de alto desgaste disponibles
- Se adapta a los cambios laterales de TRF y SH
- Se adapta a los titulares de horquilla PH

- Prolongement comme grille
- Pièces de haute usure disponibles
- Convient aux tabliers TRF et SH
- Convient aux positionneurs PH

Class 2

▼	Width x Height	Bolts Per Side	Notes
SYLBR225.082	32.00" x 48.00" 813mm x 1219mm	2	
SYLBR225.092	36.00" x 48.00" 914mm x 1219mm	2	
SYLBR225.093	37.00" x 48.00" 940mm x 1219mm	2	
SYLBR225.094	37.00" x 48.00" 940mm x 1219mm	2	
SYLBR225.098	39.00" x 48.00" 990mm x 1219mm	2	
SYLBR225.100	39.00" x 48.00" 990mm x 1219mm	2	
SYLBR225.1002	40.00" x 48.00" 1016mm x 1219mm	2	

▼	Width x Height	Bolts Per Side	Notes
SYLBR225.104	41.00" x 48.00" 1041mm x 1219mm	2	
SYLBR225.107	42.00" x 48.00" 1066mm x 1219mm	2	
SYLBR225.110	43.00" x 48.00" 1092mm x 1219mm	2	
SYLBR225.115	45.00" x 48.00" 1143mm x 1219mm	2	
SYLBR225.122	48.00" x 48.00" 1219mm x 1219mm	2	
SYLBR225.140	55.00" x 48.00" 1397mm x 1219mm	2	

Class 3

▼	Width x Height	Bolts Per Side	Notes
SYLBR335.096	38.00" x 48.00" 965mm x 1219mm	4	Light duty
SYLBR335.100	39.00" x 48.00" 990mm x 1219mm	4	Light duty
SYLBR350.100	39.00" x 48.00" 990mm x 1219mm	4	Heavy duty
SYLBR335.102	40.00" x 48.00" 1016mm x 1219mm	4	Light duty
SYLBR350.102	40.00" x 48.00" 1016mm x 1219mm	4	Heavy duty
SYLBR350.110	43.00" x 48.00" 1092mm x 1219mm	4	Light duty
SYLBR335.115	45.00" x 48.00" 1143mm x 1219mm	4	Light duty

▼	Width x Height	Bolts Per Side	Notes
SYLBR350.115	45.00" x 48.00" 1143mm x 1219mm	4	Heavy duty
SYLBR335.120	47.00" x 48.00" 1193mm x 1219mm	4	Light duty
SYLBR350.120	47.00" x 48.00" 1193mm x 1219mm	4	Heavy duty
SYLBR335.150	59.00" x 48.00" 1499mm x 1219mm	4	Light duty
SYLBR350.150	59.00" x 48.00" 1499mm x 1219mm	4	Heavy duty

Class 4

▼	Width x Height	Bolts Per Side	Notes
SYLBR460.119	47.00" x 48.00" 1193mm x 1219mm	4	Light duty
SYLBR460.150	59.00" x 48.00" 1499mm x 1219mm	4	Light duty
SYLBR480.150	59.00" x 48.00" 1499mm x 1219mm	4	Heavy duty
SYLBR460.170	67.00" x 48.00" 1701mm x 1219mm	4	Heavy duty

▼	Width x Height	Bolts Per Side	Notes
SYLBR460.180	71.00" x 48.00" 1803mm x 1219mm	4	Light duty
SYLBR480.180	71.00" x 48.00" 1803mm x 1219mm	4	Heavy duty
SYLBR480.200	79.00" x 48.00" 2007mm x 1219mm	4	Heavy duty
SYLBR460.220	87.00" x 48.00" 2209mm x 1219mm	4	Light duty

Backrest Accessories

▼	Description
CA208741	Band kit
CA208742	Band kit
CA209625	Band
CA209696F	Free lift cylinder band kit
CA210893C	Cylinder band
CA214696F	Free lift cylinder band kit

Backrest Accessories

▼	Description
CA214806F	Free lift cylinder band
CA216035C	Cylinder band
CA216036F	Free lift cylinder band
CA223077C	Cylinder band
CA223243C	Cylinder band
CA683801	Band kit

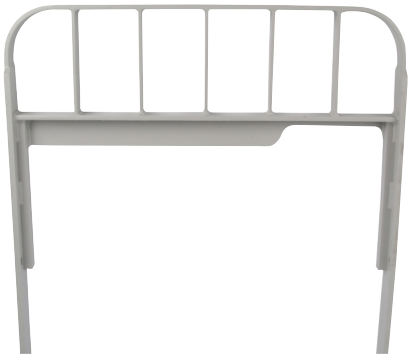

Type A

Type B

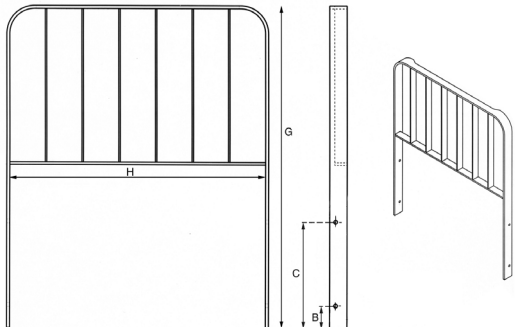

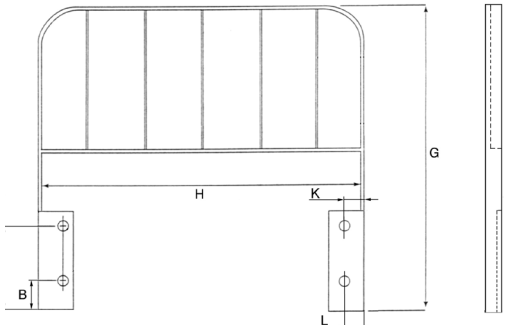

Part #	Type ▼	B		C		G		H		K	
SY800704	A	1.50"	38mm	10.50"	267mm	44.00"	1118mm	31.50"	800mm	2.25"	57mm
SY800703	A	1.50"	38mm	10.50"	267mm	32.00"	813mm	31.50"	800mm	2.25"	57mm
SY1223053	A	1.38"	35mm	14.50"	368mm	47.00"	1194mm	32.25"	819mm	2.25"	57mm
SY1223052	A	1.25"	32mm	15.00"	381mm	46.50"	1181mm	36.00"	914mm	2.00"	51mm
SY797543	A	1.25"	32mm	14.25"	362mm	45.50"	1156mm	40.00"	1016mm	2.25"	57mm
SY800702	B	0.75"	19mm	11.50"	292mm	32.50"	826mm	32.50"	826mm	1.12"	28mm
SY29159	B	0.75"	19mm	14.50"	368mm	46.50"	1181mm	36.00"	914mm	1.38"	35mm
SY1223054	B	0.75"	19mm	14.75"	375mm	46.50"	1181mm	48.25"	1226mm	1.38"	35mm

The CAM rotator is used in applications where a solution is required to revolve the load in either direction with palletized containers, boxes, drums or just the forks. This attachment can be used in several industries, from manufacturing to food processing plants. The CAM rotator is manufactured with high quality materials and components for durability and dependability.

- The opening in the centre of the rotator gives great visibility for the lift truck operator
- The standard PRC model has a 360° rotation
- Standard lift truck forks can be fitted by securing in place with the fork locking bars supplied
- One hydraulic function

El rotador CAM® se utiliza en aplicaciones donde se requiere una solución para girar la carga en cualquier dirección en contenedores, cajas, tambores o sólo con las horquillas. Este accesorio se puede utilizar en diversas industrias, desde manufactura hasta procesamiento de alimentos. El rotador CAM® está fabricado con componentes y materiales de alta calidad para una mayor durabilidad y confiabilidad.

- La abertura en el centro del rotador proporciona una visibilidad excelente para el operador
- El modelo PRC cuenta con una rotación de 360°
- Se le pueden colocar horquillas estándar, asegurándolas con las barras de bloqueo de horquillas que vienen incluidas
- Una función hidráulica

Le rotateur CAM® est utilisé dans les applications où une solution est nécessaire pour le déplacement de la charge dans les deux directions avec des conteneurs sur pallettes, des boîtes, des fûts ou simplement avec les fourches. Cet accessoire peut être utilisé dans plusieurs industries, des usines de fabrication aux entreprises de transformation des aliments. Le rotateur CAM est fabriqué avec des matériaux et des pièces d'excellente qualité pour une plus grande résistance et fiabilité.

- L'ouverture située au centre du rotateur offre une grande visibilité au conducteur du chariot élévateur
- Le modèle standard PRC peut effectuer une rotation à 360°.
- Peut être fixé en place sur les fourches standards des chariots élévateurs en utilisant les tiges de verrouillage de la fourche incluses
- 1 fonction hydraulique
- Les pièces de remplacement sont disponibles

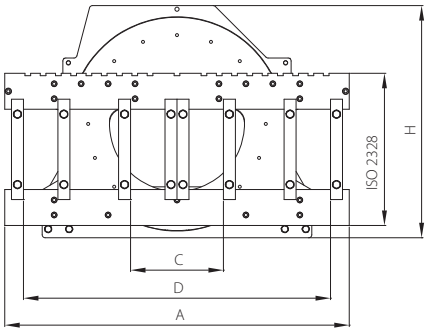

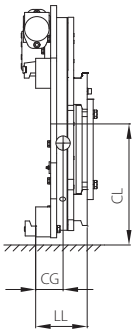

▼	Capacity		A	H	CL	C	D	RPM/ Min	LL	CG	Weight		Class
SYUPRC10	2,200lb	1,000kg	35.4"	29.2"	12.4"	8.3"	32.3"	5.5	6.5"	3.1"	462lb	210kg	2
SYUPRC14	3,000lb	1,365kg	35.4"	29.2"	12.4"	8.3"	32.3"	5.5	6.7"	3.1"	469lb	213kg	2
SYUPRC18	4,000lb	1,815kg	35.4"	29.2"	12.4"	8.3"	32.3"	5.5	6.7"	3.1"	473lb	215kg	2
SYPRC18D	4,000lb	1,815kg	35.4"	29.2"	12.4"	8.3"	32.3"	5.5	6.7"	3.1"	473lb	215kg	2
SYUPRC20	4,500lb	2,045kg	40.9"	30.5"	12.4"	8.3"	35.2"	4.8	6.7"	3.1"	496lb	225kg	2
SYPRC22D	5,000lb	2,270kg	40.9"	30.5"	16.3"	12.2"	35.2"	3.4	6.7"	3.3"	672lb	305kg	2
SYUPRC22	5,000lb	2,270kg	45.3"	30.5"	16.3"	12.2"	40.4"	3.4	6.7"	3.3"	672lb	305kg	2 & 3
SYPRC28D	6,000lb	2,800kg	45.3"	30.5"	16.3"	12.2"	40.4"	2.8	6.8"	3.3"	715lb	325kg	3
SYUPRC30	6,600lb	3,000kg	45.3"	30.5"	16.3"	12.2"	40.4"	2.8	6.9"	3.3"	716lb	325kg	3
SYPRC32D	6,600lb	3,000kg	45.3"	30.5"	16.3"	12.2"	40.4"	2.8	6.8"	3.3"	716lb	325kg	3
SYUPRC36	8,000lb	3,630kg	51.2"	33.1"	16.5"	13.0"	45.1"	2.4	7.3"	3.5"	970lb	440kg	3

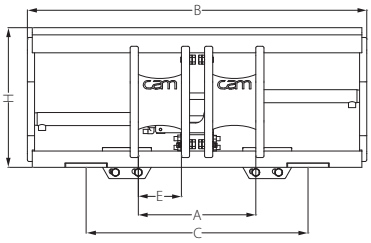

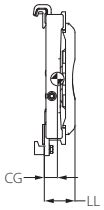

- 1 hydraulic function
- Maximum pressure 2,600psi
- Recommended oil flow 4.25gpm
- C – Minimal width lift truck carriage
- Without forks
- Technical data without forks
- Without separate sideshifting
- Drilled for CAM LBR Load Backrest

- 1 función hidráulica
- La presión máxima de 2,600psi
- Flujo de aceite recomendado 4.25gpm
- C - Ancho mínimo del montacargas
- Sin horquillas
- Datos técnicos sin horquillas
- Sin desplazamiento lateral por separado

- 1 fonction hydraulique
- Pression maximale 2 600 psi
- Débit d'huile recommandé: 4,25 gpm
- C - Chariot élévateur à largeur minimale
- Sans fourche
- Données techniques sans fourche
- Sans déplacement latéral séparé

▼	Capacity		A	B	C	E Min/Max	H	LL	CG	Weight		Class
SYPH25.092	5,500lb	2,500kg	14.2" - 33.5"	36.2"	31.5"	4.0"/5.1"	17.1"	2.8"	1.4"	145lb	66kg	2
SYPH25.098	5,500lb	2,500kg	14.2" - 35.8"	38.6"	31.5"	4.0"/5.1"	17.1"	2.8"	1.4"	152lb	69kg	2
SYPH25.102	5,500lb	2,500kg	14.2" - 37.4"	40.2"	31.5"	4.0"/5.1"	17.1"	2.8"	1.4"	158lb	72kg	2
SYPH25.104	5,500lb	2,500kg	14.2" - 38.2"	41.0"	31.5"	4.0"/5.1"	17.1"	2.8"	1.4"	160lb	73kg	2
SYPH25.110	5,500lb	2,500kg	14.2" - 40.6"	43.3"	31.5"	4.0"/5.1"	17.1"	2.8"	1.4"	169lb	77kg	2
SYPH25.115	5,500lb	2,500kg	14.2" - 42.5"	45.3"	31.5"	4.0"/5.1"	17.1"	2.8"	1.4"	174lb	79kg	2
SYPH35.110	7,700lb	3,500kg	14.2" - 40.5"	43.5"	35.4"	4.0"/5.0"	21.2"	3.1"	1.5"	249lb	113kg	3
SYPH35.115	7,700lb	3,500kg	14.2"- 42.5"	45.0"	35.4"	4.0"/5.0"	21.2"	3.1"	1.5"	258lb	117kg	3
SYPH35.125	7,700lb	3,500kg	14.2" - 46.5"	49.0"	39.3"	4.0"/5.0"	21.2"	3.1"	1.5"	275lb	125kg	3
SYPH50.115	11,000lb	5,000kg	16.2" - 40.2"	45.3"	35.4"	4.7"/6.0"	21.2"	3.2"	1.6"	328kg	149kg	3
SYPH50.125	11,000lb	5,000kg	16.2" - 44.0"	49.2"	39.4"	4.7"/6.0"	21.2"	3.2"	1.6"	348kg	158kg	3
SYPH50.135	11,000lb	5,000kg	16.2" - 48.0"	53.2"	43.3"	4.7"/6.0"	21.2"	3.2"	1.6"	370kg	168kg	3
SYPH55.120	12,100lb	5,500kg	18.1" - 41.3"	47.2"	35.4	4.7"/6.0"	26.5"	4.0"	2.0"	491lb	223kg	4
SYPH55.150	12,100lb	5,500kg	18.1" - 53.2"	59.0"	47.3	4.7"/6.0"	26.5"	4.0"	2.0"	577lb	262kg	4
SYPH55.170	12,100lb	5,500kg	18.1" - 61.0"	66.9"	55.1"	4.7"/6.0"	26.5"	4.0"	2.0"	641lb	291kg	4
SYPH70.120	15,400lb	7,000kg	18.1" - 41.3"	47.2"	39.4"	4.7"/6.0"	26.5"	4.0"	2.2"	561lb	255kg	4
SYPH70.150	15,400lb	7,000kg	18.1" - 53.2"	59.0"	45.3"	4.7"/6.0"	26.5"	4.0"	2.2"	636lb	289kg	4
SYPH70.180	15,400lb	7,000kg	18.1" - 63.4"	66.9"	51.2"	4.7"/6.0"	26.5"	4.0"	2.2"	737lb	335kg	4
SYPH70.200	15,400lb	7,000kg	18.1" - 71.3"	78.7"	59.0"	4.7"/6.0"	26.5"	4.0"	2.1"	836lb	380kg	4
SYPH70.220	15,400lb	7,000kg	18.1" - 79.1"	86.6"	67.0"	4.7"/6.0"	26.5"	4.0"	2.1"	869lb	395kg	4
SYPH80.120	17,600lb	8,000kg	18.1" - 41.3"	47.2"	39.4"	4.7"/6.0"	26.5"	4.0"	2.2"	572lb	260kg	4
SYPH80.150	17,600lb	8,000kg	18.1" - 53.2"	59.0"	45.3"	4.7"/6.0"	26.5"	4.0"	2.2"	645lb	293kg	4
SYPH80.180	17,600lb	8,000kg	18.1" - 63.4"	70.9"	51.2"	4.7"/6.0"	26.5"	4.0"	2.2"	746lb	339kg	4
SYPH80.200	17,600lb	8,000kg	18.1" - 71.3"	78.7"	59.0"	4.7"/6.0"	26.5"	4.0"	2.1"	847lb	385kg	4
SYPH80.220	17,600lb	8,000kg	18.1" - 79.0"	86.6"	67.0"	4.7"/6.0"	26.5"	4.0"	2.1"	891lb	405kg	4

PHT FORK POSITIONERS POSICIONADORES DE HORQUILLAS PHT POSITIONNEURS DE FOURCHES PHT

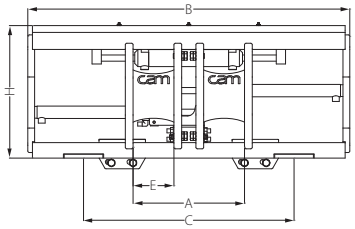

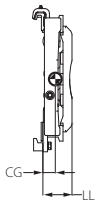

CAM® attachments

- 2 hydraulic functions
- Maximum pressure 2,600psi
- Recommended oil flow 4.25gpm
- C – Minimal width lift truck carriage
- Without forks
- Technical data without forks
- With separate sideshifting
- Standard lift truck forks can be easily fitted
- Total sideshift stroke 8" (Class 2 & 3)
- Total sideshift stroke 12" (Class 4)
- Drilled for CAM LBR Load Backrest

- 2 funciones hidráulicas
- La presión máxima de 2,600psi
- Flujo de aceite recomendado 4.25gpm
- C - Ancho mínimo del carro carretilla elevadora
- Sin horquillas
- Datos técnicos sin horquillas
- Con desplazamiento lateral por separado
- Horquillas de montacargas estándar, se pueden montar fácilmente
- Total desplazamiento lateral 8" (Class 2, 3)
- Total desplazamiento lateral 12" (Class 4)

- 2 fonctions hydrauliques
- Pression maximale 2 600 psi
- Débit d'huile recommandé: 4,25 gpm
- C - Chariot élévateur à largeur minimale
- Sans fourche
- Données techniques sans fourche
- Avec déplacement latéral séparé
- Les fourches du chariot élévateur standard peuvent être facilement montées
- Déplacement latéral total de 8 po (Classe 2, 3)
- Déplacement latéral total de 12 po (Classe 4)

▼	Capacity		A	B	C	E Min/Max	H	LL	CG	Weight		Class
SYPH25T.092	5,500lb	2,500kg	14.2" - 33.5"	36.2"	31.5"	4.0"/5.1"	17.1"	2.8"	1.4"	158lb	72kg	2
SYPH25T.098	5,500lb	2,500kg	14.2" - 35.8"	38.6"	31.5"	4.0"/5.1"	17.1"	2.8"	1.4"	165lb	75kg	2
SYPH25T.102	5,500lb	2,500kg	14.2" - 37.4"	40.2"	31.5"	4.0"/5.1"	17.1"	2.8"	1.4"	169lb	77kg	2
SYPH25T.104	5,500lb	2,500kg	14.2" - 38.2"	41.0"	31.5"	4.0"/5.1"	17.1"	2.8"	1.4"	171lb	78kg	2
SYPH25T.110	5,500lb	2,500kg	14.2" - 40.6"	43.3"	31.5"	4.0"/5.1"	17.1"	2.8"	1.4"	180lb	82kg	2
SYPH25T.115	5,500lb	2,500kg	14.2" - 42.5"	45.3"	31.5"	4.0"/5.1"	17.1"	2.8"	1.4"	185lb	84kg	2
SYPH35T.110	7,700lb	3,500kg	14.2" - 40.5"	43.5"	35.4"	4.0"/5.0"	21.2"	3.1"	1.5"	262lb	119kg	3
SYPH35T.115	7,700lb	3,500kg	14.2" - 42.5"	45.0"	35.4"	4.0"/5.0"	21.2"	3.1"	1.5"	271lb	123kg	3
SYPH35T.125	7,700lb	3,500kg	14.2" - 46.5"	49.0"	39.3"	4.0"/5.0"	21.2"	3.1"	1.5"	289lb	131kg	3
SYPH50T.115	11,000lb	5,000kg	16.2" - 40.2"	45.3"	35.4"	4.7"/6.0"	21.2"	3.2"	1.6"	344lb	156kg	3
SYPH50T.125	11,000lb	5,000kg	16.2" - 44.0"	49.2"	39.4"	4.7"/6.0"	21.2"	3.2"	1.6"	363lb	165kg	3
SYPH50T.135	11,000lb	5,000kg	16.2" - 48.0"	53.2"	43.3"	4.7"/6.0"	21.2"	3.2"	1.65"	385lb	175kg	3
SYPH55T.120	12,100lb	5,500kg	18.1" - 41.3"	47.2"	43.3"	4.7"/6.0"	26.5"	4.0"	2.0"	513lb	233kg	4
SYPH55T.150	12,100lb	5,500kg	18.1" - 53.2"	59.0"	51.2"	4.7"/6.0"	26.5"	4.0"	2.0"	601lb	273kg	4
SYPH55T.170	12,100lb	5,500kg	18.1" - 61.0"	66.9"	59.0"	4.7"/6.0"	26.5"	4.0"	2.0"	667lb	303kg	4
SYPH70T.120	15,400lb	7,000kg	18.1" - 41.3"	47.2"	43.3"	4.7"/6.0"	26.5"	4.0"	2.1"	577lb	262kg	4
SYPH70T.150	15,400lb	7,000kg	18.1" - 53.2"	59.0"	53.1"	4.7"/6.0"	26.5"	4.0"	2.1"	654lb	297kg	4
SYPH70T.180	15,400lb	7,000kg	18.1" - 63.4"	66.9"	40.6"	4.7"/6.0"	26.5"	4.0"	2.1"	755lb	343kg	4
SYPH70T.200	15,400lb	7,000kg	18.1" - 71.3"	78.7"	59.0"	4.7"/6.0"	26.5"	4.0"	2.0"	856lb	389kg	4
SYPH70T.220	15,400lb	7,000kg	18.1" - 79.1"	86.6"	67.0"	4.7"/6.0"	26.5"	4.0"	2.0"	889lb	404kg	4
SYPH80T.120	17,600lb	8,000kg	18.1" - 41.3"	47.2"	43.3"	4.7"/6.0"	26.5"	4.0"	2.1"	588lb	267kg	4
SYPH80T.150	17,600lb	8,000kg	18.1" - 53.2"	59.0"	53.1"	4.7"/6.0"	26.5"	4.0"	2.1"	665lb	302kg	4
SYPH80T.180	17,600lb	8,000kg	18.1" - 63.4"	70.9"	40.6"	4.7"/6.0"	26.5"	4.0"	2.1"	768lb	349kg	4
SYPH80T.200	17,600lb	8,000kg	18.1" - 71.3"	78.7"	59.0"	4.7"/6.0"	26.5"	4.0"	2.0"	872lb	396kg	4
SYPH80T.220	17,600lb	8,000kg	18.1" - 79.1"	86.6"	67.0"	4.7"/6.0"	26.5"	4.0"	2.0"	911lb	414kg	4

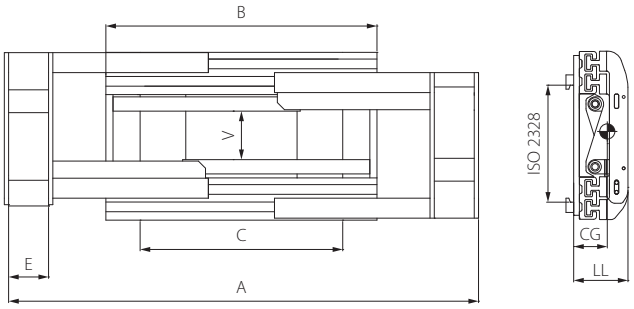

- 1 hydraulic function
- Maximum pressure 2,600psi
- Maximum advised fork length 1600mm/63"
- Without side shifter

- 1 función hidráulica
- La presión máxima de 2,600psi
- Máxima longitud de la horquilla recomendada 1600mm / 63 "
- Sin desplazador lateral

- 1 fonction hydraulique
- Pression maximale 2 600 psi
- Longueur de fourche maximale conseillée 1600 mm / 63 po
- Tablier à déplacement latéral

Wide Opening with ITA Fork Carriers

▼	Capacity		A	B	C	E Min/Max	H	LL	CG	Weight		Class
SYWA16-A0	2,500lb	1,135kg	22.0" - 68.5"	37.4"	29.5"	8.3"	5.1"	6.5"	2.8"	533lb	242kg	2
SYWA16-B0	2,500lb	1,135kg	22.0" - 72.4"	41.3"	29.5"	8.3"	5.1"	6.5"	2.8"	555lb	555lb	2
SYWA20-A0	3,600lb	1,635kg	22.0" - 68.5"	37.4"	29.5"	8.3"	5.1"	6.5"	2.8"	586lb	266kg	2
SYWA20-B0	3,600lb	1,635kg	22.0" - 72.4"	41.3"	29.5"	8.3"	5.1"	6.5"	2.8"	608lb	276kg	2
SYWA20-C0	3,600lb	1,635kg	22.0" - 76.4"	45.3"	29.5"	8.3"	5.1"	6.5"	2.8"	630lb	286kg	2
SYWA23-A0	4,500lb	2,045kg	22.0" - 68.5"	37.4"	29.5"	8.3"	5.1"	6.5"	2.8"	593lb	296kg	2
SYWA23-B0	4,500lb	2,045kg	22.0" - 72.4"	41.3"	29.5"	8.3"	5.1"	6.5"	2.8"	615lb	279kg	2
SYWA23-C0	4,500lb	2,045kg	22.0" - 76.4"	45.3"	29.5"	8.3"	5.1"	6.5"	2.8"	637lb	289kg	2
SYWA30-A0	5,500lb	2,500kg	22.0" - 72.4"	41.3"	31.5"	11.2"	5.9"	7.4"	3.0"	648lb	294kg	3
SYWA30-B0	5,500lb	2,500kg	22.0" - 76.4"	45.3"	35.4"	11.2"	5.9"	7.4"	3.0"	670lb	304kg	3
SYWA30-C0	5,500lb	2,500kg	22.0" - 82.7"	52.0"	35.4"	11.1"	5.9"	7.4"	3.0"	707lb	321kg	3
SYWA40-A0	7,000lb	3,180kg	22.0" - 76.4"	45.3"	35.4"	9.4"	5.9"	8.8"	3.7"	974lb	442kg	3
SYWA40-B0	7,000lb	3,180kg	22.0" - 82.7"	52.0"	39.4"	9.4"	5.9"	8.8"	3.7"	1,011lb	459kg	3
SYWA40-C0	7,000lb	3,180kg	22.0" - 94.5"	63.0"	41.3"	9.4"	5.9"	8.8"	3.7"	1,073lb	487kg	3
SYWA45-A0	8,500lb	3,860kg	22.0" - 76.4"	45.3"	35.4"	9.4"	5.9"	8.8"	3.7"	1,005lb	456kg	3
SYWA45-B0	8,500lb	3,860kg	22.0" - 82.7"	52.0"	39.4"	9.4"	5.9"	8.8"	3.7"	1,042lb	473kg	3
SYWA45-C0	8,500lb	3,860kg	22.0" - 94.5"	63.0"	41.3"	9.4"	5.9"	8.8"	3.7"	1,104lb	501kg	3
SYWA55-A0	10,800lb	3,860kg	22.0" - 82.7"	52.0"	39.4"	13.0"	7.9"	9.3"	4.1"	1,108lb	530kg	4
SYWA55-B0	10,800lb	3,860kg	22.0" - 94.5"	63.0"	41.3"	13.0"	7.9"	9.3"	4.1"	1,230lb	558kg	4

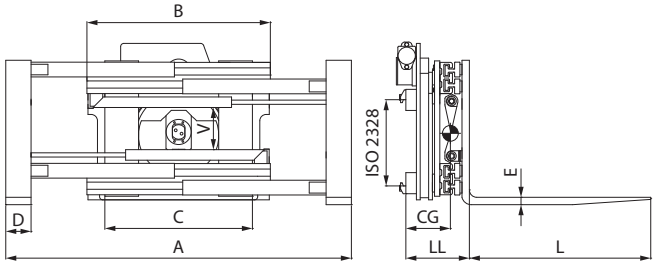

- 2 hydraulic function
- Maximum pressure 2,600psi
- Without side shifter

- 2 funciones hidráulicas
- La presión máxima de 2,600psi
- Sin desplazador lateral

- 2 fonctions hydrauliques
- Pression maximale 2 600 psi
- Sans tablier à déplacement latéral

Wide Opening 360º Rotating With Welded Forks

▼	Forks	Rotation	A	B	C	Forks L x D x E	V	LL	CG	Weight	Class
SYWF16R	2,860lb 1,300kg	2,200lb 1,000kg	18.9" - 60.6"	37.4"	29.5"	47.2" x 4.0" x 1.5"	8.3"	11.6"	10.0"	892lb 405kg	2
SYWF23R	4,180lb 1,900kg	2,860lb 1,300kg	18.9" - 60.6"	37.4"	29.5"	47.2" x 4.7" x 1.5"	8.3"	11.8"	11.0"	1,113lb 505kg	2
SYWF30R	5,500lb 2,500kg	4,570lb 2,080kg	17.7" - 64.6"	45.3"	35.4"	47.2" x 4.7" x 2.0"	11.2"	12.6"	12.0"	1,455lb 660kg	3
SYWF40R	7,260lb 3,300kg	5,060lb 2,800kg	17.7" - 64.6"	45.3"	45.3"	47.2" x 6.0" x 2.0"	9.4"	14.0"	10.7"	1,895lb 860kg	3

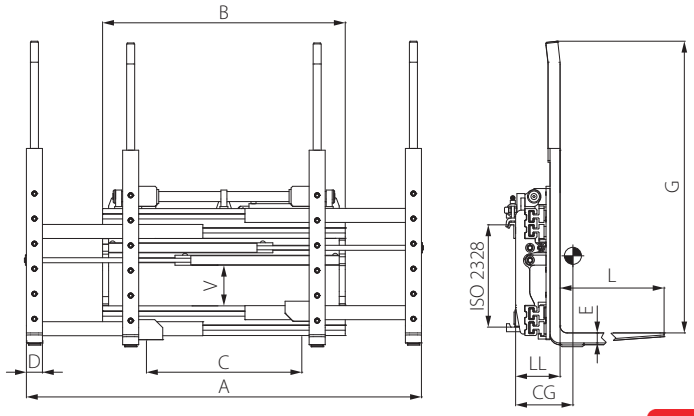

- 2 hydraulic functions
- Maximum pressure 2600psi
- Bolted forks
- Separate side shifter 8" for Class 2 and 3 and 12" for Class 4
- Flow divider integrated

- 2 funciones hidráulicas
- La presión máxima de 2,600psi
- Horquillas atornilladas
- Desplazador lateral por separado 8" Clase 2/3 12" para Clase 4
- Distribuidor de flujo integrado

- 2 fonctions hydrauliques
- Pression maximale 2 600 psi
- Fourches boulonnées
- Tablier de déplacement latéral séparé de 8 po Classe 2/3 12 po pour Classe 4
- répartiteur de débit intégré

Europallets

▼	Capacity		A	B	C	Forks L x D x E	G	V	LL	CG	Weight		Class
SYDPS16	3,500lb	1,600kg	22.0" - 67.7"	37.4"	31.5"	45.0" x 3.2" x 2.0"	51.0"	6.3"	9.1"	9.0"	1,221lb	555kg	2
SYDPS161	3,500lb	1,600kg	22.0" - 77.5"	47.2"	31.5"	45.0" x 3.2" x 2.0"	57.0"	6.3"	9.1"	8.7"	1,298lb	590kg	2
SYDPS25	5,500lb	2,500kg	22.0" - 77.5"	47.2"	33.5"	45.0" x 3.2" x 2.0"	57.0"	9.0"	9.1"	8.7"	1,331lb	605kg	3
SYDPS32	7,000lb	3,200kg	22.0" - 77.5"	47.2"	35.4"	45.0" x 3.2" x 2.0"	57.0"	9.0"	9.1"	8.6"	1,353lb	615kg	3
SYDPS40	8,800lb	4,000kg	22.0" - 77.5"	49.2"	35.4"	45.0" x 3.2" x 2.4"	57.0"	9.8"	10.7"	9.0"	1,705lb	774kg	4
SYDPS40-4	8,800lb	4,000kg	22.0" - 77.5"	35.4"	35.4"	45.0" x 3.0" x 2.3"	57.0"	9.8"	10.4"	9.1"	1,702lb	774kg	4
SYDPS1812	3,900lb	1,800kg	22.0" - 77.5"	49.2"	37.4"	92.0" x 3.2" x 2.6"	57.0"	9.8"	10.7"	20.3"	2,046lb	930kg	3
SYDPS1812-4	3,900lb	1,800kg	22.0" - 77.5"	49.2"	37.4"	92.0" x 3.2" x 2.6"	57.0"	9.8"	11.2"	20.0"	2,110lb	959kg	4
SYDPS2612	5,700lb	2,600kg	22.0" - 77.5"	51.1"	37.4"	92.0" x 3.2" x 2.7"	57.0"	9.8"	10.8"	20.7"	2,101lb	955kg	3
SYDPS2612-4	5,700lb	2,600kg	22.0" - 77.5"	51.1"	37.4"	92.0" x 3.2" x 2.7"	57.0"	9.8"	11.4"	20.4"	2,165lb	984kg	4

International Pallets

▼	Capacity		A	B	C	Forks L x D x E	G	V	LL	CG	Weight		Class
SYDPS161A	3,500lb	1,600kg	26.0" - 81.5"	47.2"	31.5"	45.0" x 3.2" x 2.0"	57.0"	6.3"	9.1"	8.7"	1,298lb	590kg	2
SYDPS16A	3,500lb	1,600kg	26.0" - 71.7"	37.4"	31.5"	45.0" x 3.2" x 2.0"	51.0"	6.3"	9.1"	9.0"	1,221lb	555kg	2
SYDPS25A	5,500lb	2,500kg	26.0" - 81.5"	47.2"	33.5"	45.0" x 3.2" x 2.0"	57.0"	9.0"	9.1"	8.7"	1,331lb	605kg	3
SYDPS32A	7,000lb	3,200kg	26.0" - 81.5"	47.2"	35.4"	45.0" x 3.2" x 2.0"	57.0"	9.0"	9.1"	8.6"	1,353lb	615kg	3
SYDPS40A	8,800lb	4,000kg	26.0" - 81.5"	49.0"	35.4"	45.0" x 3.0" x 2.3"	57.0"	9.0"	10.4"	9.1"	1,702lb	774kg	4
SYDPS40-4A	8,800lb	4,000kg	26.0" - 81.5"	49.2"	35.4"	45.0" x 3.2" x 2.4"	57.0"	9.8"	10.7"	9.0"	1,705lb	774kg	4
SYDPS1812A	3,900lb	1,800kg	26.0" - 81.5"	49.2"	37.4"	92.0" x 3.2" x 2.6"	57.0"	9.8"	10.7"	20.3"	2,046lb	930kg	3
SYDPS1812-4A	3,900lb	1,800kg	26.0" - 81.5"	49.2"	37.4"	92.0" x 3.2" x 2.6"	57.0"	9.8"	11.2"	20.0"	2,110lb	959kg	4
SYDPS2612A	5,700lb	2,600kg	26.0" - 81.5"	51.1"	37.4"	92.0" x 3.2" x 2.7"	57.0"	9.8"	10.8"	20.7"	2,101lb	955kg	3
SYDPS2612-4A	5,700lb	2,600kg	26.0" - 81.5"	51.1"	37.4"	92.0" x 3.2" x 2.7"	57.0"	9.8"	11.4"	20.4"	2,165lb	984kg	4

MULTI-FORK POSITIONERS POSICIONADORES DE MULTIPLES HORQUILLAS POSITIONNEURS POUR FOURCHES MULTIPLES

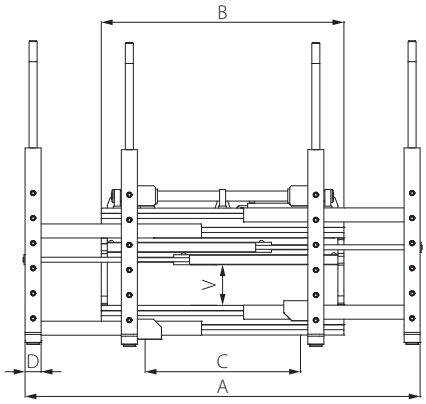

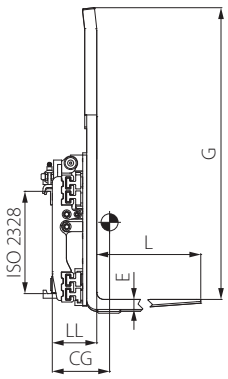

- 2 hydraulic functions
- Maximum pressure 2,600psi
- Bolted forks
- Separate side shifter 8"
- Flow divider integrated

- 2 funciones hidráulicas
- La presión máxima de 2,600psi
- Horquillas atornilladas
- Desplazador lateral por separado 8"
- Distribuidor de flujo integrado

- 2 fonctions hydrauliques
- Pression maximale 2 600 psi
- Fourches boulonnées
- Tablier de déplacement latéral séparé de 8 po
- Répartiteur de débit intégré

36" x 36" Beverage Pallets

▼	Capacity		A	B	C	Forks L x D x E	G	V	LL	HCG	VCG	Weight		Class
SYUDPS16B	3,500lb	1,600kg	26.0" - 71.7"	37.4"	31.5"	36.0" x 3.2" x 2.0"	48.0"	6.3"	9.1"	7.8"	10.1"	1,157lb	525kg	2
SYUDPS161B	3,500lb	1,600kg	26.0" - 81.5"	47.2"	31.5"	36.0" x 3.2" x 2.0"	48.0"	6.3"	9.1"	7.5"	9.9"	1,238lb	562kg	2
SYUDPS25B	5,500lb	2,500kg	26.0" - 81.5"	47.2"	33.5"	36.0" x 3.2" x 2.0"	48.0"	7.9"	9.2"	9.0"	9.9"	1,400lb	635kg	3
SYUDPS32B	7,000lb	3,200kg	26.0" - 81.5"	47.2"	35.4"	36.0" x 3.2" x 2.0"	48.0"	7.9"	9.2"	9.0"	12.9"	1,410lb	635kg	3
SYUDPS36B	8,000lb	3,600kg	26.0" - 81.5"	49.2"	35.4"	36.0" x 3.2" x 2.4"	48.0"	9.8"	10.4"	7.2"	12.4"	1,565lb	710kg	3
SYUDPS50B	10,000lb	5,000kg	26.0" - 81.5"	49.2"	35.4"	36.0" x 3.2" x 2.4"	48.0"	9.8"	10.7"	7.2"	14.1"	1,595lb	725kg	4

48" x 48" Block and GMA Pallets

▼	Capacity		A	B	C	Forks L x D x E	G	V	LL	HCG	VCG	Weight		Class
SYUDPS16G	3,500lb	1,600kg	26.0" - 71.7"	37.4"	31.5"	42.0" x 3.2" x 2.0"	48.0"	6.3"	9.1"	8.5"	9.9"	1,190lb	540kg	2
SYUDPS161G	3,500lb	1,600kg	26.0" - 81.5"	47.2"	31.5"	42.0" x 3.2" x 2.0"	48.0"	6.3"	9.1"	8.2"	9.7"	1,267lb	575kg	2
SYUDPS25G	5,500lb	2,500kg	26.0" - 81.5"	47.2"	33.5"	42.0" x 3.2" x 2.0"	48.0"	7.9"	9.2"	9.0"	9.8"	1,400lb	635kg	3
SYUDPS32G	7,000lb	3,200kg	26.0" - 81.5"	47.2"	35.4"	42.0" x 3.2" x 2.0"	48.0"	7.9"	9.2"	9.0"	12.6"	1.410lb	635kg	3
SYUDPS36G	8,000lb	3,600kg	26.0" - 81.5"	49.2"	35.4"	42.0" x 3.2" x 2.4"	48.0"	9.8"	10.4"	8.9"	11.9"	1.598lb	725kg	3
SYUDPS50G	10,000lb	5,000kg	26.0" - 81.5"	49.2"	35.4"	42.0" x 3.2" x 2.4"	48.0"	9.8"	10.7"	8.9"	13.4"	1,631lb	740kg	4

44" x 56" Container Pallets

▼	Capacity		A	B	C	Forks L x D x E	G	V	LL	HCG	VCG	Weight		Class
SYUDPS16C	3,500lb	1,600kg	26.0" - 71.7"	37.4"	31.5"	54.0" x 3.2" x 2.0"	48.0"	6.3"	9.1"	10.9"	9.7"	1,234lb	560kg	2
SYUDPS161C	3,500lb	1,600kg	26.0" - 81.5"	47.2"	31.5"	54.0" x 3.2" x 2.0"	48.0"	6.3"	9.1"	10.6"	9.5"	1,311lb	595kg	2
SYUDPS25C	5,500lb	2,500kg	26.0" - 81.5"	47.2"	33.5"	54.0" x 3.2" x 2.0"	48.0"	7.9"	9.2"	9.0"	9.5"	1,400lb	635kg	3
SYUDPS32C	7,000lb	3,200kg	26.0" - 81.5"	47.2"	35.4"	54.0" x 3.2" x 2.0"	48.0"	7.9"	9.2"	9.0"	9.5"	1,410lb	635kg	3
SYUDPS36C	8,000lb	3,600kg	26.0" - 81.5"	49.2"	35.4"	54.0" x 3.2" x 2.4"	48.0"	9.8"	10.4"	10.7"	11.7"	1,642lb	745kg	3
SYUDPS50C	10,000lb	5,000kg	26.0" - 81.5"	49.2"	35.4"	54.0" x 3.2" x 2.4"	48.0"	9.8"	10.7"	10.7"	13.2"	1,675lb	760kg	4

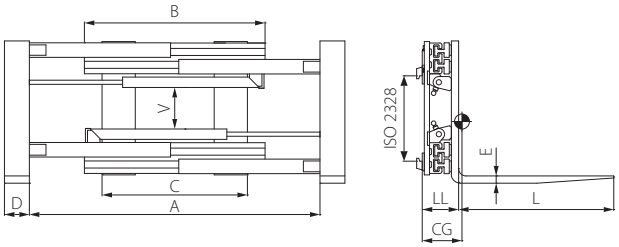

- 2 hydraulic functions
- Maximum pressure 2,600psi
- Welded on forks
- With integrated side shifter

- 2 funciones hidráulicas
- La presión máxima de 2,600psi
- Horquillas soldadas
- Con desplazador integrado

- 2 fonctions hydrauliques
- Pression maximale 2 600 psi
- Soudé sur les fourches
- Avec tablier de déplacement latéral intégré

▼	Capacity		A	B	Forks L x D x E	C	V	LL	CG	VCG	Weight		Class
SYHF10-A0T-10	1,800lb	820kg	17.7" - 63.4"	34.3"	39.4" x 4.0" x 1.3"	29.5"	7.7"	7.1"	7.6"	6.9"	687lb	312kg	2
SYHF10-A0T-12	1,800lb	820kg	17.7" - 63.4"	34.3"	47.2" x 4.0" x 1.3"	29.5"	7.7"	7.1"	7.9"	6.9"	709lb	322kg	2
SYHF10-B0T-10	1,800lb	820kg	14.2" - 59.0"	37.4"	39.4" x 4.0" x 1.3"	29.5"	7.7"	7.1"	7.5"	6.9"	709lb	322kg	2
SYHF10-B0T-12	1,800lb	820kg	14.2" - 59.0"	37.4"	47.2" x 4.0" x 1.3"	29.5"	7.7"	7.1"	7.9"	6.9"	731lb	332kg	2
SYHF10-C0T-10	1,800lb	820kg	14.2" - 63.0"	41.3"	39.4" x 4.0" x 1.3"	29.5"	7.7"	7.1"	7.7"	6.9"	731lb	332kg	2
SYHF10-C0T-12	1,800lb	820kg	14.2" - 63.0"	41.3"	47.2" x 4.0" x 1.3"	29.5"	7.7"	7.1"	8.1"	6.9"	753lb	342kg	2
SYHF14-A0T-10	2,500lb	1,135kg	17.7" - 63.4"	34.3"	39.4" x 4.0" x 1.6"	29.5"	7.7"	7.1"	7.7"	6.5"	701lb	318kg	2
SYHF14-A0T-12	2,500lb	1,135kg	17.7" - 63.4"	34.3"	47.2" x 4.0" x 1.6"	29.5"	7.7"	7.1"	8.1"	6.5"	723lb	328kg	2
SYHF14-B0T-10	2,500lb	1,135kg	17.7" - 66.5"	37.4"	39.4" x 4.0" x 1.6"	29.5"	7.7"	7.1"	7.6"	6.5"	712lb	323kg	2
SYHF14-B0T-12	2,500lb	1,135kg	17.7" - 66.5"	37.4"	47.2" x 4.0" x 1.6"	29.5"	7.7"	7.1"	8.0"	6.5"	734lb	333kg	2
SYHF14-C0T-10	2,500lb	1,135kg	14.2" - 63.0"	41.3"	39.4" x 4.0" x 1.6"	29.5"	7.7"	7.1"	7.5"	6.5"	742lb	337kg	2
SYHF14-C0T-12	2,500lb	1,135kg	14.2" - 63.0"	41.3"	47.2" x 4.0" x 1.6"	29.5"	7.7"	7.1"	7.9"	6.5"	764lb	347kg	2
SYHF14-D0T-10	2,500lb	1,135kg	21.7" - 78.0"	45.3"	39.4" x 4.0" x 1.6"	29.5"	7.7"	7.1"	7.4"	6.5"	762lb	346kg	2
SYHF14-D0T-12	2,500lb	1,135kg	21.7" - 78.0"	45.3"	47.2" x 4.0" x 1.6"	29.5"	7.7"	7.1"	7.8"	6.5"	782lb	355kg	2
SYHF18-A0T-10	3,500lb	1,590kg	18.9" - 66.9"	37.4"	39.4" x 4.0" x 1.6"	29.5"	7.3"	7.3"	8.1"	6.5"	756lb	343kg	2
SYHF18-A0T-12	3,500lb	1,590kg	18.9" - 66.9"	37.4"	47.2" x 4.0" x 1.6"	29.5"	7.3"	7.3"	8.7"	6.5"	778lb	353kg	2
SYHF18-B0T-10	3,500lb	1,590kg	14.2" - 62.2"	41.3"	39.4" x 4.0" x 1.6"	29.5"	7.3"	7.3"	7.3"	6.5"	771lb	350kg	2
SYHF18-B0T-12	3,500lb	1,590kg	14.2" - 62.2"	41.3"	47.2" x 4.0" x 1.6"	29.5"	7.3"	7.3"	8.3"	6.5"	793lb	360kg	2
SYHF18-B1T-10	3,500lb	1,590kg	18.9" - 70.9"	41.3"	39.4" x 4.0" x 1.6"	29.5"	7.3"	7.3"	7.3"	6.5"	778lb	353kg	2
SYHF18-B1T-12	3,500lb	1,590kg	18.9" - 70.9"	41.3"	47.2" x 4.0" x 1.6"	29.5"	7.3"	7.3"	8.3"	6.5"	800lb	363kg	2
SYHF18-C0T-10	3,500lb	1,590kg	18.9" - 74.8"	45.3"	39.4" x 4.0" x 1.6"	29.5"	7.3"	7.3"	7.1"	6.5"	789lb	358kg	2
SYHF18-C0T-12	3,500lb	1,590kg	18.9" - 74.8"	45.3"	47.2" x 4.0" x 1.6"	29.5"	7.3"	7.3"	8.1"	6.5"	811lb	368kg	2
SYHF18-D0T-10	3,500lb	1,590kg	14.2" - 70.1"	49.2"	39.4" x 4.0" x 1.6"	33.5"	7.3"	7.3"	7.0"	6.5"	804lb	365kg	2
SYHF18-D0T-12	3,500lb	1,590kg	14.2" - 70.1"	49.2"	47.2" x 4.0" x 1.6"	33.5"	7.3"	7.3"	8.0"	6.5"	826lb	375kg	2
SYHF22-A0T-10	4,000lb	1,820kg	16.9" - 65.4"	37.4"	39.4" x 4.7" x 1.6"	29.5"	7.1"	7.3"	8.1"	6.4"	824lb	374kg	2 & 3
SYHF22-A0T-12	4,000lb	1,820kg	16.9" - 65.4"	37.4"	47.2" x 4.7" x 1.6"	29.5"	7.1"	7.3"	9.1"	6.4"	846lb	384kg	2 & 3
SYHF22-B1T-10	4,000lb	1,820kg	12.6" - 60.6"	41.3"	39.4" x 4.7" x 1.6"	29.5"	7.1"	7.3"	8.1"	6.4"	835lb	379kg	2 & 3
SYHF22-B1T-12	4,000lb	1,820kg	12.6" - 60.6"	41.3"	47.2" x 4.7" x 1.6"	29.5"	7.1"	7.3"	9.1"	6.4"	857lb	389kg	2 & 3
SYHF22-C0T-10	4,000lb	1,820kg	17.7" - 74.8"	41.3"	39.4" x 4.7" x 1.6"	29.5"	7.1"	7.3"	8.1"	6.4"	848lb	385kg	2 & 3
SYHF22-C0T-12	4,000lb	1,820kg	17.7" - 74.8"	41.3"	47.2" x 4.7" x 1.6"	29.5"	7.1"	7.3"	9.1"	6.4"	870lb	395kg	2 & 3
SYHF22-D1T-10	4,000lb	1,820kg	12.6" - 68.5"	49.2"	39.4" x 4.7" x 1.6"	33.5"	7.1"	7.3"	8.1"	6.4"	859lb	390kg	2 & 3

▼	Capacity		A	B	Forks L x D x E	C	V	LL	CG	VCG	Weight		Class
SYHF22-D1T-12	4,000lb	1,820kg	12.6" - 68.5"	49.2"	47.2" x 4.7" x 1.6"	33.5"	7.1"	7.3"	9.1"	6.4"	881lb	400kg	2 & 3
SYHF26-A0T-10	5,000lb	2,270kg	17.7" - 70.9"	41.3"	39.4" x 4.7" x 1.8"	33.5"	7.1"	7.5"	7.9"	6.9"	903lb	410kg	3
SYHF26-A0T-12	5,000lb	2,270kg	17.7" - 70.9"	41.3"	47.2" x 4.7" x 1.8"	33.5"	7.1"	7.5"	8.9"	6.9"	925lb	420kg	3
SYHF26-B1T-10	5,000lb	2,270kg	12.6" - 64.6"	45.3"	39.4" x 4.7" x 1.8"	33.5"	7.1"	7.5"	7.7"	6.9"	919lb	417kg	3
SYHF26-B1T-12	5,000lb	2,270kg	12.6" - 64.6"	45.3"	47.2" x 4.7" x 1.8"	33.5"	7.1"	7.5"	8.7"	6.9"	941lb	427kg	3
SYHF26-C0T-10	5,000lb	2,270kg	17.3" - 78.0"	49.2"	39.4" x 4.7" x 1.8"	33.5"	7.1"	7.5"	7.6"	6.9"	936lb	425kg	3
SYHF26-C0T-12	5,000lb	2,270kg	17.3" - 78.0"	49.2"	47.2" x 4.7" x 1.8"	33.5"	7.1"	7.5"	8.5"	6.9"	958lb	435kg	3
SYHF26-D1T-10	5,000lb	2,270kg	12.6" - 71.3"	52.0"	39.4" x 4.7" x 1.8"	33.5"	7.1"	7.5"	7.5"	6.9"	952lb	432kg	3
SYHF26-D1T-12	5,000lb	2,270kg	12.6" - 71.3"	52.0"	47.2" x 4.7" x 1.8"	33.5"	7.1"	7.5"	12.3"	6.9"	976lb	443kg	3
SYHF30-A0T-10	5,500lb	2,500kg	12.6" - 63.8"	45.3"	39.4" x 4.7" x 2.0"	33.5"	6.9"	8.9"	7.3"	7.8"	1,388lb	630kg	3
SYHF30-A0T-12	5,500lb	2,500kg	12.6" - 63.8"	45.3"	47.2" x 4.7" x 2.0"	33.5"	6.9"	8.9"	8.5"	7.8"	1,421lb	645kg	3
SYHF30-B0T-10	5,500lb	2,500kg	17.7" - 77.6"	49.2"	39.4" x 4.7" x 2.0"	33.5"	6.9"	8.9"	7.2"	7.8"	1,417lb	643kg	3
SYHF30-B0T-12	5,500lb	2,500kg	17.7" - 77.6"	49.2"	47.2" x 4.7" x 2.0"	33.5"	6.9"	8.9"	8.3"	7.8"	1,450lb	658kg	3
SYHF30-C0T-10	5,500lb	2,500kg	12.6" - 70.1"	52.0"	39.4" x 4.7" x 2.0"	33.5"	6.9"	8.9"	7.1"	7.8"	1,444lb	655kg	3
SYHF30-C0T-12	5,500lb	2,500kg	12.6" - 70.1"	52.0"	47.2" x 4.7" x 2.0"	33.5"	6.9"	8.9"	8.3"	7.8"	1,477lb	670kg	3
SYHF35-A0T-10	6,500lb	2,950kg	12.6" - 63.8"	45.3"	39.4" x 4.7" x 2.0"	33.5"	6.7"	8.9"	7.3"	7.9"	1,399lb	635kg	3
SYHF35-A0T-12	6,500lb	2,950kg	12.6" - 63.8"	45.3"	47.2" x 4.7" x 2.0"	33.5"	6.7"	8.9"	8.5"	7.9"	1,432lb	650kg	3
SYHF35-B0T-10	6,500lb	2,950kg	12.6" - 70.5"	52.0"	39.4" x 4.7" x 2.0"	33.5"	6.7"	8.9"	7.1"	7.9"	1,455lb	660kg	3
SYHF35-B0T-12	6,500lb	2,950kg	12.6" - 70.5"	52.0"	47.2" x 4.7" x 2.0"	33.5"	6.7"	8.9"	8.3"	7.9"	1,488lb	675kg	3
SYHF35-C0T-10	6,500lb	2,950kg	17.7" - 85.8"	57.1"	39.4" x 4.7" x 2.0"	39.4"	6.7"	8.9"	7.0"	7.9"	1,496lb	679kg	3
SYHF35-C0T-12	6,500lb	2,950kg	17.7" - 85.8"	57.1"	47.2" x 4.7" x 2.0"	39.4"	6.7"	8.9"	8.1"	7.9"	1,527lb	693kg	3
SYHF40-A0T-12	7,300lb	3,320kg	10.2" - 61.4"	45.3"	47.2" x 6.0" x 2.3"	35.4"	6.5"	9.5"	8.7"	9.5"	1,587lb	720kg	3
SYHF40-B0T-12	7,300lb	3,320kg	17.7" - 80.7"	52.0"	47.2" x 6.0" x 2.3"	39.4"	6.5"	9.5"	8.3"	9.5"	1,664lb	755kg	3
SYHF40-C0T-12	7,300lb	3,320kg	17.7" - 85.8"	57.1"	47.2" x 6.0" x 2.3"	41.3"	6.5"	9.5"	8.0"	9.5"	1,752lb	795kg	3
SYHF45-A0T-12	8,300lb	3,770kg	13.8" - 77.6"	57.1"	47.2" x 6.0" x 2.3"	41.3"	8.3"	9.6"	8.2"	10.5"	1,785lb	810kg	4
SYHF45-B0T-12	8,300lb	3,770kg	11.8" - 78.7"	66.9"	47.2" x 6.0" x 2.3"	41.3"	8.3"	9.6"	8.1"	10.5"	1,917lb	870kg	4

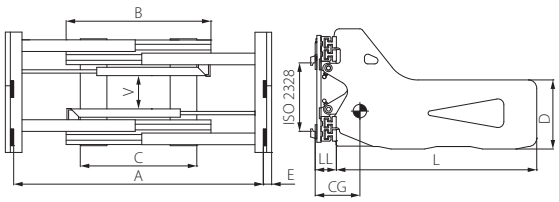

- 2 hydraulic functions
- Maximum pressure 2,600psi
- With integrated side shifter

- 2 funciones hidráulicas
- La presión máxima de 2,600psi
- Con desplazador integrado

- 2 fonctions hydrauliques
- Pression maximale 2 600 psi
- Avec tablier de déplacement latéral intégré

▼	Capacity		A	B	Forks L x D x E	C	V	LL	CG	VCG	Weight		Class
SYHB10-A0T-09	1,800lb	820kg	17.7" - 62.5"	37.4"	35.4" x 15.7" x 1.0"	29.5"	7.7"	5.2"	9.4"	8.3"	813lb	369kg	2
SYHB10-A0T-10	1,800lb	820kg	17.7" - 62.5"	37.4"	39.4" x 15.7" x 1.0"	29.5"	7.7"	5.2"	11.4"	8.3"	857lb	389kg	2
SYHB10-A1T-09	1,800lb	820kg	21.7" - 70.5"	37.4"	35.4" x 15.7" x 1.0"	29.5"	7.7"	5.2"	6.5"	8.3"	826lb	375kg	2
SYHB10-A1T-10	1,800lb	820kg	21.7" - 70.5"	37.4"	39.4" x 15.7" x 1.0"	29.5"	7.7"	5.2"	11.4"	8.3"	868lb	394kg	2
SYHB14-A0T-09	2,500lb	1,135kg	21.7" - 70.5"	37.4"	35.4" x 15.7" x 1.0"	29.5"	7.7"	5.2"	9.5"	8.4"	846lb	384kg	2
SYHB14-A0T-10	2,500lb	1,135kg	21.7" - 70.5"	37.4"	39.4" x 15.7" x 1.0"	29.5"	7.7"	5.2"	11.4"	8.4"	892lb	405kg	2
SYHB14-B0T-09	2,500lb	1,135kg	17.7" - 66.5"	41.3"	35.4" x 15.7" x 1.0"	29.5"	7.7"	5.2"	9.3"	8.4"	859lb	390kg	2
SYHB14-B0T-10	2,500lb	1,135kg	17.7" - 66.5"	41.3"	39.4" x 15.7" x 1.0"	29.5"	7.7"	5.2"	11.2"	8.4"	925lb	420kg	2
SYHB14-C0T-09	2,500lb	1,135kg	17.7" - 70.5"	45.3"	35.4" x 15.7" x 1.0"	29.5"	7.7"	5.2"	9.1"	8.4"	903lb	410kg	2
SYHB14-C0T-10	2,500lb	1,135kg	17.7" - 70.5"	45.3"	39.4" x 15.7" x 1.0"	29.5"	7.7"	5.2"	11.1"	8.4"	947lb	430kg	2
SYHB14-C1T-09	2,500lb	1,135kg	25.6" - 86.2"	45.3"	35.4" x 15.7" x 1.0"	29.5"	7.7"	5.2"	9.1"	8.4"	925lb	420kg	2
SYHB14-C1T-10	2,500lb	1,135kg	25.6" - 86.2"	45.3"	39.4" x 15.7" x 1.0"	29.5"	7.7"	5.2"	11.1"	8.4"	970lb	440kg	2
SYHB18-A0T-10	3,500lb	1,590kg	22.0" - 70.1"	37.4"	39.4" x 15.7" x 1.2"	29.5"	7.3"	5.3"	10.1"	9.2"	987lb	448kg	2
SYHB18-A0T-12	3,500lb	1,590kg	22.0" - 70.1"	37.4"	47.2" x 15.7" x 1.2"	29.5"	7.3"	5.3"	11.9"	9.2"	1,047lb	475kg	2
SYHB18-B0T-10	3,500lb	1,590kg	18.1" - 66.1"	41.3"	39.4" x 15.7" x 1.2"	29.5"	7.3"	5.3"	9.8"	9.2"	1,014lb	460kg	2
SYHB18-B0T-12	3,500lb	1,590kg	18.1" - 66.1"	41.3"	47.2" x 15.7" x 1.2"	29.5"	7.3"	5.3"	11.5"	9.2"	1,069lb	485kg	2
SYHB18-C0T-10	3,500lb	1,590kg	22.0" - 80.0"	45.3"	39.4" x 15.7" x 1.2"	29.5"	7.3"	5.3"	9.6"	9.2"	1,042lb	473kg	2
SYHB18-C0T-12	3,500lb	1,590kg	22.0" - 80.0"	45.3"	47.2" x 15.7" x 1.2"	29.5"	7.3"	5.3"	11.2"	9.2"	1,119lb	508kg	2
SYHB18-D0T-10	3,500lb	1,590kg	18.1" - 74.0"	49.2"	39.4" x 15.7" x 1.2"	33.5"	7.3"	5.3"	9.4"	9.2"	1,082lb	491kg	2
SYHB18-D0T-12	3,500lb	1,590kg	18.1" - 74.0"	49.2"	47.2" x 15.7" x 1.2"	33.5"	7.3"	5.3"	10.9"	9.2"	1,139lb	517kg	2
SYHB22-A0T-10	4,000lb	1,820kg	22.4" - 70.9"	37.4"	39.4" x 15.7" x 1.2"	29.5"	7.1"	5.3"	9.8"	9.4"	972lb	441kg	2
SYHB22-A0T-12	4,000lb	1,820kg	22.4" - 70.9"	37.4"	47.2" x 15.7" x 1.2"	29.5"	7.1"	5.3"	10.8"	9.4"	1,042lb	473kg	2
SYHB22-B0T-10	4,000lb	1,820kg	26.0" - 81.9"	41.3"	39.4" x 15.7" x 1.2"	29.5"	7.1"	5.3"	9.6"	9.4"	1,036lb	470kg	2
SYHB22-B0T-12	4,000lb	1,820kg	26.0" - 81.9"	41.3"	47.2" x 15.7" x 1.2"	29.5"	7.1"	5.3"	10.6"	9.4"	1,097lb	498kg	2
SYHB22-C0T-10	4,000lb	1,820kg	22.0" - 80.0"	45.3"	39.4" x 15.7" x 1.2"	29.5"	7.1"	5.3"	9.5"	9.4"	1,062lb	482kg	2
SYHB22-C0T-12	4,000lb	1,820kg	22.0" - 80.0"	45.3"	47.2" x 15.7" x 1.2"	29.5"	7.1"	5.3"	10.4"	9.4"	1,117lb	507kg	2
SYHB22-D0T-10	4,000lb	1,820kg	22.4" - 82.7"	49.2"	39.4" x 15.7" x 1.2"	33.5"	7.1"	5.3"	9.4"	9.4"	1,086lb	493kg	2
SYHB22-D0T-12	4,000lb	1,820kg	22.4" - 82.7"	49.2"	47.2" x 15.7" x 1.2"	33.5"	7.1"	5.3"	10.3"	9.4"	1,148lb	521kg	2
SYHB26-A0T-10	5,000lb	2,270kg	21.7" - 73.2"	41.3"	39.4" x 15.7" x 1.2"	29.5"	7.1"	5.4"	10.4"	9.4"	1,036lb	470kg	2 & 3
SYHB26-A0T-12	5,000lb	2,270kg	21.7" - 73.2"	41.3"	47.2" x 15.7" x 1.2"	29.5"	7.1"	5.4"	10.8"	9.4"	1,084lb	492kg	2 & 3
SYHB26-B0T-10	5,000lb	2,270kg	26.4" - 86.6"	45.3"	39.4" x 15.7" x 1.2"	29.5"	7.1"	5.4"	10.2"	9.4"	1,067lb	484kg	2 & 3

▼	Capacity		A	B	Forks L x D x E	C	V	LL	CG	VCG	Weight		Class
SYHB26-B0T-12	5,000lb	2,270kg	26.4" - 86.6"	45.3"	47.2" x 15.7" x 1.2"	29.5"	7.1"	5.4"	10.5"	9.4"	1,122lb	509kg	2 & 3
SYHB26-C0T-10	5,000lb	2,270kg	20.9" - 79.5"	49.2"	39.4" x 15.7" x 1.2"	33.5"	7.1"	5.4"	10.0"	9.4"	1,095lb	497kg	2 & 3
SYHB26-C0T-12	5,000lb	2,270kg	20.9" - 79.5"	49.2"	47.2" x 15.7" x 1.2"	33.5"	7.1"	5.4"	10.3"	9.4"	1,150lb	522kg	2 & 3
SYHB26-D0T-10	5,000lb	2,270kg	26.4" - 91.3"	52.0"	39.4" x 15.7" x 1.2"	33.5"	7.1"	5.4"	9.6"	9.4"	1,113lb	505kg	2 & 3
SYHB26-D0T-12	5,000lb	2,270kg	26.4" - 91.3"	52.0"	47.2" x 15.7" x 1.2"	33.5"	7.1"	5.4"	10.0"	9.4"	1,168lb	530kg	2 & 3
SYHB30-A0T-12	5,500lb	2,500kg	24.4" - 82.3"	45.3"	47.2" x 15.7" x 1.3"	33.5"	6.9"	6.4"	12.0"	9.8"	1,752lb	795kg	3
SYHB30-A0T-14	5,500lb	2,500kg	24.4" - 82.3"	45.3"	55.1" x 15.7" x 1.3"	33.5"	6.9"	6.4"	13.7"	9.8"	1,807lb	820kg	3
SYHB30-B0T-12	5,500lb	2,500kg	20.5" - 78.3"	49.2"	47.2" x 15.7" x 1.3"	33.5"	6.9"	6.4"	11.8"	9.8"	1,781lb	808kg	3
SYHB30-B0T-14	5,500lb	2,500kg	20.5" - 78.3"	49.2"	55.1" x 15.7" x 1.3"	33.5"	6.9"	6.4"	13.4"	9.8"	1,847lb	838kg	3
SYHB30-C0T-12	5,500lb	2,500kg	25.2" - 90.5"	52.0"	47.2" x 15.7" x 1.3"	33.5"	6.9"	6.4"	11.6"	9.8"	1,814lb	823kg	3
SYHB30-C0T-14	5,500lb	2,500kg	25.2" - 90.5"	52.0"	55.1" x 15.7" x 1.3"	33.5"	6.9"	6.4"	13.1"	9.8"	1,882lb	854kg	3
SYHB35-A0T-12	6,500lb	2,950kg	16.9" - 68.1"	45.3"	47.2" x 15.7" x 1.3"	35.4"	6.7"	6.5"	12.1"	10.2"	1,856lb	842kg	3
SYHB35-A0T-14	6,500lb	2,950kg	16.9" - 68.1"	45.3"	55.1" x 15.7" x 1.3"	35.4"	6.7"	6.5"	13.8"	10.2"	1,911lb	867kg	3
SYHB35-B0T-12	6,500lb	2,950kg	27.2" - 95.3"	52.0"	47.2" x 15.7" x 1.3"	39.4"	6.7"	6.5"	11.6"	10.2"	1,878lb	852kg	3
SYHB35-B0T-14	6,500lb	2,950kg	27.2" - 95.3"	52.0"	55.1" x 15.7" x 1.3"	39.4"	6.7"	6.5"	13.3"	10.2"	1,948lb	884kg	3
SYHB35-C0T-12	6,500lb	2,950kg	22.0" - 90.2"	57.1"	47.2" x 15.7" x 1.3"	39.4"	6.7"	6.5"	11.4"	10.2"	1,915lb	869kg	3
SYHB35-C0T-14	6,500lb	2,950kg	22.0" - 90.2"	57.1"	55.1" x 15.7" x 1.3"	39.4"	6.7"	6.5"	13.0"	10.2"	1,977lb	897kg	3
SYHB42-A0T-12	7,700lb	3,500kg	23.6" - 81.5"	45.3"	47.2" x 15.7" x 1.3"	35.4"	6.5"	6.8"	11.7"	10.4"	2,052lb	931kg	3
SYHB42-A0T-14	7,700lb	3,500kg	23.6" - 81.5"	45.3"	55.1" x 17.7" x 1.6"	35.4"	6.5"	6.8"	13.3"	10.4"	2,127lb	965kg	3
SYHB42-A0T-16	7,700lb	3,500kg	23.6" - 81.5"	45.3"	63.0" x 17.7" x 1.6"	35.4"	6.5"	6.8"	14.9"	10.4"	2,186lb	992kg	3
SYHB42-B0T-12	7,700lb	3,500kg	22.0" - 85.0"	52.0"	47.2" x 17.7" x 1.6"	39.4"	6.5"	6.8"	11.5"	10.4"	2,114lb	959kg	3
SYHB42-B0T-14	7,700lb	3,500kg	22.0" - 85.0"	52.0"	55.1" x 17.7" x 1.6"	39.4"	6.5"	6.8"	13.0"	10.4"	2,175lb	987kg	3
SYHB42-B0T-16	7,700lb	3,500kg	22.0" - 85.0"	52.0"	63.0" x 17.7" x 1.6"	39.4"	6.5"	6.8"	14.6"	10.4"	2,239lb	1,016kg	3
SYHB42-C0T-12	7,700lb	3,500kg	26.8" - 98.4"	57.1"	47.2" x 17.7" x 1.6"	41.3"	6.5"	6.8"	11.3"	10.4"	2,182lb	990kg	3
SYHB42-C0T-14	7,700lb	3,500kg	26.8" - 98.4"	57.1"	55.1" x 17.7" x 1.6"	41.3"	6.5"	6.8"	12.8"	10.4"	2,255lb	1,023kg	3
SYHB42-C0T-16	7,700lb	3,500kg	26.8" - 98.4"	57.1"	63.0" x 17.7" x 1.6"	41.3"	6.5"	6.8"	14.4"	10.4"	2,334lb	1,059kg	3
SYHB45-A0T-12	9,500lb	4,300kg	23.6" - 91.3"	57.1"	47.2" x 17.7" x 1.6"	41.3"	8.3"	7.1"	11.5"	12.9"	2,270lb	1,030kg	4
SYHB45-A0T-14	9,500lb	4,300kg	23.6" - 91.3"	57.1"	55.1" x 17.7" x 1.6"	41.3"	8.3"	7.1"	13.0"	12.9"	2,356lb	1,069kg	4
SYHB45-A0T-16	9,500lb	4,300kg	23.6" - 91.3"	57.1"	63.0" x 17.7" x 1.6"	41.3"	8.3"	7.1"	14.2"	12.9"	2,447lb	1,110kg	4
SYHB45-B0T-12	9,500lb	4,300kg	27.6" - 105.1"	63.0"	47.2" x 17.7" x 1.6"	41.3"	8.3"	7.1"	11.4"	12.9"	2,319lb	1,052kg	4
SYHB45-B0T-14	9,500lb	4,300kg	27.6" - 105.1"	63.0"	55.1" x 17.7" x 1.6"	41.3"	8.3"	7.1"	12.8"	12.9"	2,398lb	1,088kg	4
SYHB45-B0T-16	9,500lb	4,300kg	27.6" - 105.1"	63.0"	63.0" x 17.7" x 1.6"	41.3"	8.3"	7.1"	14.0"	12.9"	2,488lb	1,129kg	4
SYHB60-A0T-14	13,000lb	5,900kg	24.8" - 98.8"	63.0"	55.1" x 19.7" x 1.8"	41.3"	5.9"	9.6"	12.6"	13.9"	2,854lb	1,295kg	4
SYHB60-A0T-16	13,000lb	5,900kg	24.8" - 98.8"	63.0"	63.0" x 19.7" x 1.8"	41.3"	5.9"	9.6"	14.4"	13.9"	2,998lb	1,360kg	4
SYHB60-B0T-14	13,000lb	5,900kg	28.0" - 113.0"	70.9"	55.1" x 19.7" x 1.8"	41.3"	5.9"	9.6"	12.3"	13.9"	2,932lb	1,330kg	4
SYHB60-B0T-16	13,000lb	5,900kg	28.0" - 113.0"	70.9"	63.0" x 19.7" x 1.8"	41.3"	5.9"	9.6"	14.1"	13.9"	3,075lb	1,395kg	4

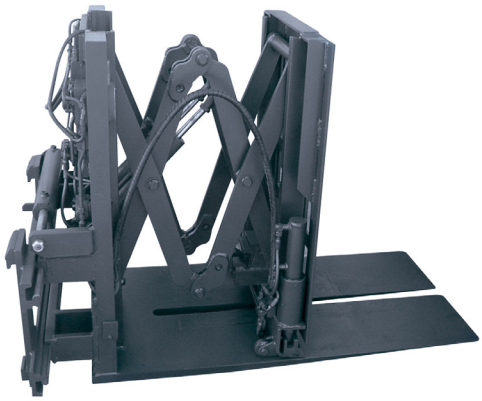

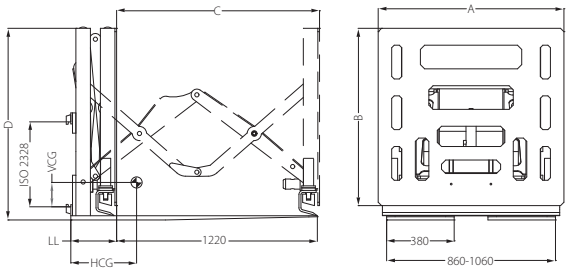

- 1 hydraulic function
- Maximum pressure 2,300psi
- No sheet retainer

*With sheet retainer

- 1 función hidráulica
- La presión máxima de 2,300psi
- Sin placa de reten

*Con placa de reten

- 1 fonction hydraulique
- Pression maximale 2 300 psi
- Avec suspenseur de plaque

▼	Capacity		A	B	C	W Platen Size	D Outside Platen Spacing	VCG	LL	HCG	Weight		Class
SYPP1612	3,500lb	1,587kg	40.0"	41.0"	50.0"	15.0"	34.0" - 41.7"	8.2"	9.1"	8.2"	1,444lb	625kg	2
SYPP2012	4,500lb	2,041kg	40.0"	41.0"	50.0"	15.0"	34.0" - 41.7"	8.1"	9.1"	8.1"	1,466lb	632kg	2
SYPP1612A	3,500lb	1,587kg	40.0"	41.0"	50.0"	18.0"	40.0" - 48.0"	7.9"	9.1"	8.4"	1,426lb	647kg	2
SYPP2012A	4,500lb	2,041kg	40.0"	41.0"	50.0"	18.0"	40.0" - 48.0"	7.8"	9.1"	8.3"	1,439lb	653kg	2

***With sheet retainer**

▼	Capacity		A	B	C	W Platen Size	D Outside Platen Spacing	VCG	LL	HCG	Weight		Class
SYPP1612S	3,500lb	1,587kg	40.0"	41.0"	50.0"	15.0"	34.0" - 41.7"	8.5"	9.1"	8.3"	1,499lb	670kg	2
SYPP2012S	4,500lb	2,041kg	40.0"	41.0"	50.0"	15.0"	34.0" - 41.7"	8.6"	9.1"	8.1"	1,521lb	671kg	2
SYPP1612SA	3,500lb	1,587kg	40.0"	41.0"	50.0"	18.0"	40.0" - 48.0"	7.9"	9.1"	8.4"	1,426lb	647kg	2
SYPP2012SA	4,500lb	2,041kg	40.0"	41.0"	50.0"	18.0"	40.0" - 48.0"	7.8"	9.1"	8.3"	1,439lb	653kg	2

ANCHORS ANCLAS ANCRES

▼	Description
CA201432	Chain
CA201434	Chain 55D 7.50
CA201435	Chain 60D 7.50
CA223079	Chain
CA678661	Chain 55D 6.0
CA678755	Chain 35D 6.0
CA679144	Chain 45D 8.070

▼	Description
CA679146	Chain
CA680240	Chain 40D 6.0
CA680242	Chain 60D 6.0
CA683816	Chain 55D 4.9
CA683817	Chain 60D 4.9
CA686240	Bracket

BACKRESTS RESPALDOS DE CARGA SOUTIEN DE CHARGE

▼	Description
CA684770	31" X 48"
CA684773	37" X 48" Class 2
CA684774	37" X 60" Class 2
CA684776	41" X 48" Class 2

▼	Description
CA684779	49" X 48" Class 2
CA684785	37" X 48" Class 3
CA684788	41" X 48" Class 3

BANDS BANDAS BANDES

▼	Description
CA208741	Band kit
CA208742	Band kit
CA209625	Band
CA209696	Free lift cylinder band kit
CA210893	Cylinder band
CA214696	Free lift band kit

▼	Description
CA214806	Free lift cylinder band
CA216035	Cylinder band
CA216036	Free lift cylinder band
CA223077	Cylinder band
CA223243	Cylinder band
CA683801	Band kit

BEARINGS & ROLLERS RODAMIENTOS Y RODILLOS BILLES ET ROULEAUX

▼	Description
CA13663	Open ball bearing
CA201493	Mast roller bearing
CA205070	Roller assembly
CA208365	Bearing
CA210080	Bearing
CA211718	Bearing
CA212585	Bearing segment
CA223150	Mast roller bearing
CA226842	Bronze lower bearing
CA231359	Mast roller bearing
CA231426	Double seal ball bearing
CA2357723	Mast roller bearing
CA2359625	Cylindrical roller bearing
CA2383572	Mast roller bearing
CA2801859	Mast roller bearing
CA2803436	Mast roller bearing
CA2J683819	Double seal ball bearing
CA4787-0413	Bearing segment
CA563782	Taper roller bearing
CA6070833	Bearing segment
CA6108953	Lower bearing
CA6113016	Bearing shim
CA6131022	Bearing upper right

▼	Description
CA6131023	Bearing upper left
CA652247	Mast roller bearing
CA660050	Mast roller bearing
CA660050A	Mast roller bearing
CA661549	Mast roller bearing
CA662145	Mast roller bearing
CA662145A	Mast roller bearing
CA664206	Mast roller bearing
CA664207	Mast roller bearing
CA669790	Open ball bearing
CA670580	Double seal ball bearing
CA670581	Open ball bearing
CA672261	Roller
CA672287	Bearing
CA683819	Double seal ball bearing
CA683819A	Double seal ball bearing
CA688168	Double seal ball bearing
CA688169	Mast roller bearing
CA797469	Mast roller bearing
CA9904001	Roller bearing assembly
CA9904002	Roller bearing assembly
CAC205070	Roller assembly
CAC652247	Mast roller bearing

BLOCKS BLOQUES BLOCS

▼	Description
CA207552	Adjustment block
CA212709	Block
CA610838	Swivel block
CA670549	Safety block
CA676650	Sliding block

▼	Description
CA680116	Swivel block
CAC610838	Swivel block
CAC676650	Sliding block
CAC680116	Swivel block

BRACKETS SOPORTES SUPPORTS

▼	Description
CA203477	Bracket
CA210652	Bracket
CA210654	Bracket
CA210672	Lower bracket
CA210689	Upper outer bracket
CA211045	Bracket
CA213736	LH bracket
CA213737	RH bracket
CA214931	Upper bracket
CA215556	Bracket/Guard - IHR 55/60D MT
CA218021	Lower inner bracket

▼	Description
CA219704	Bracket
CA230805	Bracket
CA232744	Lower inner bracket
CA234781	Bracket
CA234865	Bracket
CA246647	Bracket
CA2816982	Bracket
CA673428	Bracket
CA673429	Bracket
CAC215556	Bracket/Guard - IHR 55/60D MT
CAC234781	Bracket

BUSHINGS BUJES BAUGES

▼	Description
CA200590	Bushing
CA204535	Bushing
CA211717	Bushing
CA218360	Bushing
CA218363	Bronze bushing
CA6020486	Bushing kit - 2
CA6033485	Bronze bushing
CA6066556	Bushing
CA628070	Bushing
CA674840	Bushing
CA674843	Bushing

▼	Description
CA675007	Bushing
CA675662	Mast bushing
CA676104	Bushing
CA676105	Bushing
CA683153	Bushing
CA683154	Bushing
CA687362	Mast bushing
CA687382	Mast bushing
CA687383	Bushing
CAC683155	Bushing

CLAMPS ABRAZADERAS PINCE

▼	Description
CA227854	Hose clamp
CA227855	Hose clamp
CA237555	Clamp kit

▼	Description
CA682978	Clamp
CAC227855	Hose clamp

CYLINDERS CILINDROS VERINS

▼	Description
CA10039	Cylinder
CA10039-1	Cylinder
CA1037530	Master cylinder
CA21006	Cylinder
CA21006-1	Cylinder
CA21006-4	Sideshift cylinder
CA210064K	Sideshift cylinder
CA219979	Gas cylinder
CA557380	Cylinder

▼	Description
CA584001	Cylinder
CA6020048	Cylinder assembly
CA6020443	Cylinder
CA6020444	Cylinder assembly
CA6025683	Cylinder
CA6025684	Cylinder assembly
CA6025685	Cylinder
CA675548	Cylinder assembly
CAC6025684	Cylinder assembly

FORK EXTENSIONS EXTENSIONES PARA HORQUILLAS RALLONGES DE FOURCHES

▼	Description	Dimensions
CA7000052	1 Pair	4" x 60"
CA7000056	1 Pair	4" x 72"
CA7000059	1 Pair	5" x 48"
CA7000060	1 Pair	5" x 54"
CA7000061	1 Pair	5" x 60"

▼	Description	Dimensions
CA7000064	1 Pair	5" x 72"
CA7000065	1 Pair	5" x 84"
CA7000070	1 Pair	6" x 72"
CA7000073	1 Pair	6" x 96"

FITTINGS CONEXIONES RACCORDS

▼	Description
CA213011	Fitting
CA2453	Elbow extension fitting
CA2680	Fitting
CA293041	Fitting
CA601250	Elbow fitting
CA601676	Elbow fitting
CA604511	Fitting
CA605230	Adaptor fitting
CA605948	Fitting
CA611288	Fitting
CA611289	Fitting
CA611299	Fitting
CA611330	Fitting - HCE 788

▼	Description
CA617641	Fitting
CA617915	Fitting
CA617918	Weatherhead fitting
CA624280	Grease flush fitting
CA626505	Fitting
CA642649	Fitting
CA646318	Fitting
CA651303	90° fitting
CA651853	Grease fitting
CA7401	Fitting
CA7418	Grease fitting
CAC642649	Fitting

GRIPS APRETADORES POIGNÉES

▼	Description
CA678833	Mounting grip
CA683179	Mounting grip

GUARDS PROTECTORES GARDE HYDRAULIQUE DE TUYAU

▼	Description
CA207478	Chain guard
CA207481	Guard
CA207483	Chain guard
CA210174	Hoseguard - 45D MQ cold stor.

▼	Description
CA234022	Guard
CAC207478	Chain guard
CAC207483	Chain guard
CAC210174	Hoseguard - 45D MQ cold stor.

GUIDES GUÍAS GUIDES

▼	Description
CA203808	Lower guide
CA207209	Sideshifter wear guide
CA208857	Sideshifter wear guide
CA208858	Sideshifter wear guide
CA214911	Lower guide
CA214921	Lower guide
CA216471	Upper guide
CA218361	Sideshifter wear guide
CA4501-0222	Sideshifter wear guide
CA560465	Guide spring
CA6000719	Sideshifter wear guide

▼	Description
CA6033487	Sideshifter wear guide
CA667662	Sideshifter wear guide
CA667906	Sideshifter wear guide
CA667907	Sideshifter wear guide
CA668905	Sideshifter wear guide
CA668910	Sideshifter wear guide
CA668911	Sideshifter wear guide
CA671165	Sideshifter wear guide
CA675515	Guide
CA675958	Guide

HOOKS ENGANCHES CROCHETS

▼	Description
CA204182	Lower hook group
CA204186	Hook
CA228166	Hook
CA6004779	Hook
CA6018267	Lower hook group
CA6066574	Lower hook
CA670527	Hook
CA670528	Hook
CA675514	Hook

▼	Description
CA675957	Hook
CA675968	Lower hook
CA675969	Hook
CA677160	Lower hook
CA678034	Hook
CA678934	Hook group
CA679832	Hook
CA8508373	Lower hook

HOSES MANGUERAS TUYAUX

▼	Description
CA205957	Hose
CA205958	Hose
CA206249	Hose - C32 73½"
CA206250	Hose
CA207578	Hydraulic hose
CA210233	Hose
CA211509	Hose - 194"
CA211513	Hose - 213"
CA211520	Hose - 77"
CA215999	Hose assembly
CA216924	Hose
CA217448	Hose
CA218379	Hose - 200"

▼	Description
CA218481	Hose - 198"
CA227883	Hose - 193"
CA249117	Hose
CA30409B	Vacuum hose
CA35192A	Recovery hose
CA6002138	Hose
CA6002139	Hose
CA673394	Hose
CA683172	Hose
CA683173	Hose
CA683560	Hose
CA685831	Hose
CA685978	Hose

HOSE REELS CARRETES PARA MANGUERAS ENROULEURS

▼	Description
CA646040	Right hand
CA646041	Left hand
CA646046	Right hand
CA646047	Left hand
CA646048	Right hand
CA672570	Right hand
CA672571	Left hand
CA672572	Right hand
CA672573	Left hand
CA672575	Left hand
CA672576	Right hand
CA672577	Left hand
CA673562	Right hand

▼	Description
CA679532	Right hand
CA679534	Right hand
CA679535	Left hand
CA679537	Left hand
CA679538	Right hand
CA679540	Right hand
CA679541	Left hand
CA679542	Right hand
CA679543	Left hand
CA679544	Right hand

Fork Pin Kit

Hydraulic Seal Kit

Main Lift Cylinder Kit

▼	Description
CA1000784	Seal kit
CA1000785	Seal kit
CA1000786	Seal kit
CA1000787	Seal kit
CA1000788	Seal kit
CA1000789	Seal kit
CA1002524	Seal kit - 45D free lift
CA1002530	Lift cylinder seal kit
CA203112	Pin kit
CA206394	Hydraulic motor kit
CA206405	Cylinder seal kit
CA206421	Motor seal kit
CA206599	Hydraulic cylinder seal kit
CA206770	Stub shaft service kit
CA210090	Cylinder seal kit
CA210133	Seal service kit
CA212072	Cylinder service kit
CA212587	Plugs service kit
CA212588	Plugs service kit
CA216042	Basic mast roller service kit
CA216676	Cylinder service kit
CA219868	Hydraulic cylinder seal kit
CA220804	Seal kit
CA226956	Seal kit
CA293880	Seal kit
CA294092	Retainer kit
CA3103588	Seal kit
CA422811	Cylinder seal kit
CA422818	Cylinder seal kit 55/60D-MD FL
CA423384	Seal kit
CA423412	Cylinder seal kit 55/60D-MD FL
CA552834	Tilt cylinder seal kit
CA553861	Side shift cylinder seal kit
CA553861P	Side shift cylinder seal kit
CA553866	Service kit
CA555227	Service kit
CA555725	Service kit
CA556486	Service kit
CA556733	Seal kit
CA559960	Steer cylinder seal kit
CA559972	Sideshift cylinder seal kit
CA559974	Service kit
CA560349	Lift cylinder seal kit
CA560350	Service kit
CA560351	Lift cylinder seal kit
CA560352	Lift cylinder seal kit
CA560729	Service kit
CA561226	Main lift cylinder kit
CA561305	Lift cylinder seal kit
CA561307	Lift cylinder seal kit
CA561315	Cylinder service kit

▼	Description
CA561430	Service kit
CA561936	Cylinder service kit
CA562338	Kit
CA562339	Service kit
CA562591	Lift cylinder seal kit
CA563487	Side shift cylinder seal kit
CA563904	Check valve service kit
CA563927	Main lift cylinder kit
CA564050	Lift cylinder seal kit
CA564409	Cylinder seal kit
CA564453	Hydraulic cylinder seal kit
CA564709	Cylinder service kit
CA6068008	Seal kit
CA6088014	Shim kit
CA6091229	Seal kit
CA6137234	Seal kit
CA615939	Seal kit
CA615940	Valve seal kit
CA619786	Service kit
CA629326	Hydraulic cylinder seal kit
CA629495	Seal kit
CA638884	Lift cylinder seal kit
CA639456	Lift cylinder seal kit
CA639461	Lift cylinder seal kit
CA642300	Lift cylinder seal kit
CA643280	Lift cylinder seal kit
CA645059	Lift cylinder seal kit
CA645121	Lift cylinder seal kit
CA646305	Lift cylinder seal kit
CA646339	Seal kit
CA646340	Hydraulic seal kit
CA647626	Cylinder seal kit
CA651876	Shaft seal service kit
CA653904	Check valve service kit
CA656223	Service kit
CA656920	Cylinder service kit
CA660954	Service kit
CA660955	Service kit
CA661505	Lift cylinder service kit
CA664839	Hydraulic seal kit
CA667513	Service kit
CA667516	Service kit
CA667622	Lift cylinder seal kit
CA667723	Hydraulic cylinder seal kit
CA667995	Service kit
CA668021	Side shift cylinder seal kit
CA668925	Retainer kit
CA668926	Cylinder kit nut
CA669597	Service kit
CA671191	Service kit
CA672563	Service kit

▼	Description
CA674777	Service kit
CA674806	Service kit
CA674831	Pin kit with bushings
CA675018	Pin kit
CA675326	Shim kit
CA675329	Hydraulic motor kit
CA675474	Cylinder seal kit
CA675854	Service kit
CA675856	Class 3 puck kit
CA675857	Class 3 puck kit
CA676810	Tip repair kit
CA677833	Service kit
CA681585	Hydraulic cylinder seal kit
CA681777	Pin kit with bushings
CA681778	Pin kit
CA681785	Pin kit
CA681787	Pin kit
CA684827	Hydraulic cylinder seal kit
CA7000031	Fork pin kit
CA7000032	Fork stop kit
CA7000033	Fork pin kit
CA7000034	Fork pin kit
CA7000035	Fork stop kit
CA7000040	Fork pin kit
CA7000042	Fork pin kit
CAC219868	Hydraulic cylinder seal kit
CAC293880	Seal kit
CAC553861	Side shift cylinder seal kit
CAC553866	Service kit
CAC555725	Hydraulic cylinder seal kit
CAC556486	Service kit
CAC559974	Service kit
CAC560349	Lift cylinder seal kit
CAC561315	Cylinder service kit
CAC562591	Lift cylinder seal kit
CAC563487	Side shift cylinder seal kit
CAC563927	Main lift cylinder kit
CAC564050	Lift cylinder seal kit
CAC564409	Cylinder seal kit
CAC564453	Hydraulic cylinder seal kit
CAC564709	Cylinder service kit
CAC6068008	Seal kit
CAC615940	Valve seal kit
CAC628080	Cylinder seal kit
CAC639461	Lift cylinder seal kit
CAC646339	Seal kit
CAC646340	Hydraulic seal kit
CAC647626	Cylinder seal kit
CAC656223	Service kit
CAC664839	Hydraulic seal kit
CAC667513	Service kit
CAC667622	Lift cylinder seal kit
CAC667723	Hydraulic cylinder seal kit
CAC667995	Service kit
CAC672563	Service kit
CAC674806	Service kit
CAC675854	Service kit
CAC677833	Service kit
CAC681778	Pin kit
CAC681785	Pin kit

▼	Description
CAC684827	Hydraulic cylinder seal kit
CAC7000031	Fork pin kit
CACC-559960	Steer cylinder seal kit
CACC-560349	Lift cylinder seal kit
CACC-560351	Lift cylinder seal kit
CACC-560717	Check valve service kit
CACC-561226	Main lift cylinder kit
CACC-561305	Lift cylinder seal kit
CACC-561307	Lift cylinder seal kit
CACC-563487	Side shift cylinder seal kit
CACC-563904	Check valve service kit
CACC-563927	Main lift cylinder kit
CACC-564409	Cylinder seal kit
CACC-646339	Seal kit
CACC-675857	Class 3 puck kit
CACC-K2PKR-M	Fork pin kit
CACC-K3PKR	Fork kit
CACC-K460	Fork pin kit
CACC553861	Side shift cylinder seal kit
CACC559960	Steer cylinder seal kit
CACC560349	Lift cylinder seal kit
CACC560351	Lift cylinder seal kit
CACC560352	Lift cylinder seal kit
CACC560717	Check valve service kit
CACC561226	Main lift cylinder kit
CACC561305	Lift cylinder seal kit
CACC561307	Lift cylinder seal kit
CACC562591	Lift cylinder seal kit
CACC563487	Side shift cylinder seal kit
CACC563904	Check valve service kit
CACC563927	Main lift cylinder kit
CACC564409	Cylinder seal kit
CACC651876	Shaft seal service kit
CACC656223	Service kit
CACC664839	Hydraulic seal kit
CACC667995	Service kit
CACC672563	Service kit
CACC677833	Service kit
CACCK2PKR-M	Fork pin kit
CACCK3PKR	Fork kit
CACCK460	Fork pin kit
CACK2PKRM	Fork pin kit
CACK470	Fork pin kit
CACK490	Fork latch kit
CAFPK-4736	Fork kit
CAK2PKR	Fork pin kit
CAK2PKR-M	Fork pin kit
CAK2PKRM	Fork pin kit
CAK2PRK-M	Fork pin kit
CAK3PKR	Fork stop kit
CAK3PKR-M	Fork kit
CAK460	Fork pin kit
CAK470	Fork pin kit
CAK472	Fork pin kit
CAK484	Fork pin kit
CAK485	Fork kit
CAK490	Fork latch kit
CAK4PK-M	Fork pin kit
CAN2PKR-M	Fork pin kit
CAN4PK	Fork latch kit

LINKS ENLACES PIECES DE JONCTIONS

▼	Description
CA674994	Link
CA674700	Link

MOTORS MOTORES MOTEUR

▼	Description
CA206392	Hydraulic motor
CA206394	Hydraulic motor
CA215903	Hydraulic motor
CA44917A	3 stage vacuum motor 24VDC

NUTS, BOLTS & WASHERS TUERCAS, TORNILLOS & ARANDELAS ÉCROUS, BOULONS ET RONDELLES

Top Lock Nut

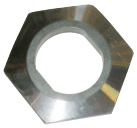

Washer

Lock Washer

Socket Head Bolt M-5

▼	Description
CA200006	Nut
CA200007	Jam nut ⅝-18
CA200242	Full hex nut
CA200244	Hex jam nut
CA201669	Washer
CA205369	Speed washer
CA205979	Nut
CA206174	Hex head bolt
CA206315	Lock washer
CA206321	Bolt - M6-1.00 16 HE
CA206923	Eye bolt
CA210166	Nut - M12
CA221733	Washer
CA550218	Lock hex jam nut
CA553857	Top lock nut ⅝-11
CA563785	Washer
CA5718	Hex jam nut
CA601468	Washer
CA6050	Lock nut
CA6229	Flat washer M8
CA6444	Washer
CA6448	Washer
CA667225	Flat washer ¾"
CA667625	Nut
CA667626	Washer
CA667668	Nut
CA667676	Washer
CA668031	Nut
CA670692	Washer
CA674261	Bolt

▼	Description
CA678990	Nut
CA678991	Lock washer
CA680218	He head bolt
CA681238	Lock washer ⅜
CA683822	Spring washer
CA684125	Hex head bolt
CA684295	Bolt
CA684586	Lock washer
CA684604	He bolt
CA684633	He head bolt
CA684649	Bolt
CA684660	Lock washer
CA766154	Bolt - M16-2.0 40mm
CA767614	Socket head bolt M-5
CA768208	Bolt
CA768414	Bolt
CA768838	Bolt
CA769572	Hex head bolt M1235mm
CA769573	Bolt
CA773842	Nut
CA779009	Bolt
CA781534	Lock nut
CA783609	Seal washer
CA786881	Hex nut m8
CA787372	Bolt - M8 x 1.25
CA787375	U joint bolt
CA787381	He nut ⅜-16
CA787398	Flat washer M8
CAC768794	U joint bolt

PADS ALMOHADILLAS GLISSERES

▼	Description
CA204212	Wear pad
CA208387	Wear pad lower
CA2559542071	Pedal pad
CA283975	ISS H.D. wear pad kit

▼	Description
CA292092	ISS H.D. wear pad kit
CA355715	Wear pad
CA661786	Quad bumper pad
CA672712	Gripper pad

PINS PASADORES ARRÊTS DE FOURCHES

▼	Description
CA204533	Pin
CA204695	Pin
CA204696	Pin
CA205065	Pin
CA206925	Pin
CA207210	Pin
CA209308	Pin
CA210161	Pin
CA2744571	Pin
CA6003311	Retainer pin
CA6020429	Pin
CA606212	Dowel pin
CA6110442	Pin
CA622907	Fork pin
CA6510	Cotter pin
CA6518	Cotter pin
CA6525	Pin
CA660628	Pin
CA672726	Pin
CA673385	Lock pin
CA674265	Pin
CA674701	Pin
CA674993	Pin

▼	Description
CA676088	Pin
CA678528	Pin
CA678667	Pin
CA678832	Pin
CA678964	Anchor pin
CA679149	Connecting pin
CA680639	Lock pin
CA681780	Pin
CA681782	Pin
CA681786	Lock pin
CA682822	Pin
CA682823	Pin
CA682999	Pin
CA683183	Pin
CA683799	Pin
CA683802	Pin
CA684305	Pin
CA684430	Pin
CA686215	Clevis pin
CA687377	Pivot pin
CA689954	Pin
CA751511	Pin
CA7890	Roll pin

RETAINERS RETENEDORES RETENUES

▼	Description
CA206589	Retainer
CA206591	Retainer
CA210140	Bearing retainer
CA212586	Bearing retainer
CA222617	Carriage retainer
CA225345	Bearing retainer

▼	Description
CA6122007	Bearing retainer
CA658378	Carriage retainer
CA667624	Retainer
CA669894	Retaining ring
CA674828	Retainer

SEALS SELLOS AUTOCOLLANTS

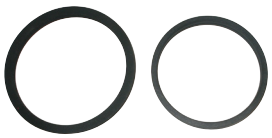

▼	Description
CA1702	Lock seal
CA214649	Seal
CA553521	Seal
CA562131	Wiper seal
CA6066832	Cylinder seal
CA641835	Rod seal

▼	Description
CA662447	Rod seal
CA662451	Seal
CA662452	Seal
CA662457	Lift cylinder seal
CA662462	Seal

SEGMENTS SEGMENTOS SEGMENTS

▼	Description
CA6127049	Segment
CA672018	Segment

SHAFTS EJES ARBRES

▼	Description
CA207489	Shaft
CA207493	Shaft
CA208675	Shaft

▼	Description
CA210173	Stub cold storage shaft
CA672543	Shaft
CA684657	Shaft

SHEAVES POLEAS ROUES ET POULIES

▼	Description
CA203385	Sheave
CA204156	Sheave
CA207484	Sheave
CA207488	Sheave
CA207490	Sheave
CA209623	Sheave
CA210172	Sheave with bushing
CA210175	Sheave with bushing
CA210622	Sheave
CA210662	Sheave
CA210667	Sheave
CA210670	Sheave
CA210677	Sheave
CA214937	Sheave

▼	Description
CA215558	Sheave
CA215772	Sheave
CA216911	Sheave
CA223071	Chain sheave assembly
CA231427	Chain sheave
CA2381757	Hose sheave
CA2770171	Hose sheave
CA660051	Chain sheave
CA661550	Sheave
CA677267	Hose sheave
CA683793	Hose sheave
CA689647	Hose sheave
CA9904029	Hose sheave
CACC-210758	Sheave

SHIMS CALZOS CALES

▼	Description
CA200524	Shim
CA200525	Shim
CA203388	Shim
CA205086	Shim
CA212559	Shim
CA213913	Shim
CA215722	Shim
CA228395	Shim

▼	Description
CA2359551	Shim
CA6311881	Shim
CA631881	Shim
CA637536	Shim
CA660200	Shim
CA683161	Shim
CA683162	Shim
CA683163	Shim

SLIDES DESLIZADORES DIAPOSITIVES

▼	Description
CA228782	Slider
CA601605	Bronze slide
CA6051249	Slider
CA6057162	Slider
CA682814	Slide

▼	Description
CA8508374	Side shift upper slider
CA8508375	Side shift upper slider
CA8508376	Side shift lower slider
CA8508377	Side shift lower slider

SPRINGS RESORTES RESSORTS

▼	Description
CA212683	Gas spring
CA215012	Spring
CA218895	Gas spring
CA562847	Spring
CA6111893	Spring

▼	Description
CA6133449	Spring
CA622908	Spring
CA661212	Spring
CA672047	Spring

SWITCHES INTERRUPTORES INTERRUPTEURS

▼	Description
CA665004	Switch
CA677112	Switch assembly

TUBES TUBOS TUBES

▼	Description
CA200647	Tube
CA200648	Tube
CA200649	Tube
CA203386	Quad depot tube
CA203387	Quad tube

▼	Description
CA209668	Tube
CA214808	Tube
CA214809	Tube - 35D-MQ
CA2394910	Tube assembly
CA248902	Tube

VALVES VÁLVULAS VALVES

▼	Description
CA206919	Valve
CA206991	Solenoid valve
CA214795	Lowering control valve - 12GPM
CA2809398	Flow control valve
CA557212	Check valve
CA560717	Check valve
CA6072308	Valve assembly
CA6121796	Cartridge valve

▼	Description
CA658947	Check valve
CA659058	Check valve
CA660412	Regulator valve
CA678270	Valve
CA684810	Control valve
CA689661	Valve assembly
CACC656920	Check valve

WEAR PADS, PLATES, PLUGS & STRIPS
ALMOHADILLAS, PLACAS DE DESGASTE & TAPONES VÊTEMENTS, TAMPONS, PLAQUES, PRISES ET BANDES

▼	Description
CA200869	2 trunnion strap assembly
CA204187	Wear strip
CA204188	Wear strip
CA206915	Wear strip
CA208350	Wear plate
CA209303	Wear strip
CA213899	Wear strip
CA215719	2.2mm rectangle wearplug
CA215720	4.2mm rectangle wearplug
CA215721	6.2mm rectangle wearplug
CA4730-1040	Wear strip
CA4730-1050	Wear strip
CA4786-0413	Wear strip

▼	Description
CA4786-0468	Wear strip
CA4786-0488	Wear strip
CA4787-0468	Wear strip
CA4787-0488	Wear strip
CA6000647	Wear strip
CA6110475	Wear plate
CA6138135	Wear strip
CA667661	Carriage wear pad
CA667663	Wear plate
CA668904	Carriage wear pad
CA671423	Wear strip
CA672022	Wear plate
CA675614	Wear tile

WELDMENTS PIEZAS SOLDADAS CONSTRUCTIONS SOUDÉES

▼	Description
CA206035	Guard weldment
CA215998	Bracket weldment
CA231063	Bracket weldment
CA234021	Bracket weldment

UNITED STATES

Olathe, Kansas
(800) 255-4109
Grayslake, Illinois
Greer, South Carolina
Elizabethtown, Pennsylvania
Miami, Florida
Mira Loma, California
Portland, Oregon
Shreveport, Louisiana
Latin America and the Caribbean
+1 (913) 768-3099

CANADA

Mississauga, Ontario
(800) 509-7668
Port Coquitlam, British Columbia
(888) 661-8611

MEXICO

Cuautitlán Izcalli, EDM
Apodaca, N.L.
+52 (55) 5861-8550

BRAZIL

Vinhedo, São Paulo
Araquari, Santa Catarina
+55 (19) 3045-4250

BELGIUM

Waregem
+32 56 43 42 11

WWW.TVH.COM

16355 S. Lone Elm Rd / Olathe, KS 66062 / United States
WWW.TVH.COM

SYPNFORKSQRG_2203018T